CITY OF Englewood

AGENDA

1000 Englewood Pkwy – Council Chambers
Englewood, CO 80110

Regular City Council Meeting
Monday, Dec. 7, 2015 ◆7:30 p.m.

1. Call to Order.

2. Invocation.

3. Pledge of Allegiance.

4. Roll Call.

5. Consideration of Minutes of Previous Session.

   a. Minutes from the Regular City Council Meeting of Nov. 16, 2015.

6. Recognition of Scheduled Public Comment. The deadline to sign up to speak for Scheduled Public Comment is Wednesday, prior to the meeting, through the City Manager's Office. Only those who meet the deadline can speak in this section. (This is an opportunity for the public to address City Council. There is an expectation that the presentation will be conducted in a respectful manner. Council may ask questions for clarification, but there will not be any dialogue. Please limit your presentation to five minutes.)

   a. Recognition of student artists whose artwork is included in the 2016 Englewood Calendar:
      Isaiah (Jett) Coleman, 11th Grader at Colorado's Finest High School of Choice
      Avery Garcia, 2nd Grader at Cherrelyn Elementary
      Jake Swenson, 12th Grader at Colorado's Finest High School of Choice
      Alexis Garb, 3rd Grader at Clayton Elementary
      Brianna Cervantes, 9th Grader at Englewood High School
      Eden Thomas, 1st Grader at Cherrelyn Elementary
      Emelia Mullenberg, 9th Grader Colorado's Finest High School of Choice
      Brook Sullivan, 6th Grader at Clayton Elementary
      Gabriella Fatovic, Kindergartner at All Souls School
      Miranda Coleman, 9th Grader at Englewood High School
      Estie Vercande, 1st Grader at Cherrelyn Elementary
      Jes Connell, 9th Grader at Colorado's Finest High School of Choice
      Dustin Peterson, 10th Grader at Englewood High School

   b. Oscar Reyes, from Color Esperanza, will thank the Council for their 2016 funding.

   c. Color Esperanza will address Council regarding their vision and outreach in Englewood.

   d. Doug Cohn, Englewood resident, will address Council regarding historic preservation.

   e. Elaine Hults, Englewood resident, will address Council regarding Council's decorum.

7. Recognition of Unscheduled Public Comment. Speakers must sign up for Unscheduled Public Comment at the beginning of the meeting. (This is an opportunity for the public to address City Council. There is an expectation that the presentation will be conducted in a respectful manner. Council may ask

questions for clarification, but there will not be any dialogue. Please limit your presentation to three minutes. Time for unscheduled public comment may be limited to 45 minutes, and if limited, shall be continued to General Discussion.)

Council Response to Public Comment.

8. Communications, Proclamations, and Appointments.

   a. Proclamation declaring December 15, 2015, Bill of Rights Day.

9. Consent Agenda Items

   a. Approval of Ordinances on First Reading.

      i. Council Bill 60 – The Littleton/Englewood Wastewater Treatment Plant recommends Council approve a bill for an ordinance approving an IGA for NetDMR between the L/E WWTP and Colorado Department of Public Health and Environment, Water Quality Control Division for the Clean Water Act National Pollutant Discharge Elimination System permit-required electronic reporting of the Discharge Monitoring Reports. **Staff: WWTP Director Dennis Stowe**

      ii. Council Bill 62 - The Police Department recommends Council adopt a bill for an ordinance authorizing the Englewood Police Department to accept grant funding from the Colorado Department of Transportation (CDOT) 405C Traffic Records Program for an E-Ticketing system. **Staff: Deputy Police Chief Jeff Sanchez**

   b. Approval of Ordinances on Second Reading.

   c. Resolutions and Motions.

10. Public Hearing Items.

11. Ordinances, Resolutions and Motions.

   a. Approval of Ordinances on First Reading.

      i. Council Bill 61 - The Utilities Department recommends Council approve a bill for an ordinance approving Valley Sanitation District Supplement #24. **Staff: Director of Utilities Tom Brennan**

      ii. Council Bill 58 - The City Manager's Office recommends Council table a bill for an ordinance amending Title 6, Chapter 1, Section 8, of the Englewood Municipal Code 2000 adopting smoking prohibitions, state standards, further defining public buildings and unifying the definition of tobacco throughout the code. **Staff: City Manager Eric Keck**

   b. Approval of Ordinances on Second Reading.

      i. Council Bill 59 - Approving a six-month extension on the marijuana social club moratorium. **Staff: Interim Community Development Director Michael Flaherty**

c. Resolutions and Motions.

i. The Public Works Department recommends Council approve, by motion, the purchase of a 2016 Freightliner M2 106 dump truck with an attached PB loader from Transwest Truck Trailer RV for $183,521. **Staff: Right of Way Services Manager Larry Nimmo & Fleet Manager Pat White**

ii. The Fleet/ServiCenter recommends Council approve, by motion, the purchase of a Volvo IFB-15-015 four wheel drive loader from Power Equipment Company in the amount of $116,816.00. **Staff: Fleet Manager Pat White**

iii. The Utilities Department recommends Council approve, by motion, the Advanced Utility Systems annual maintenance billing in the amount of $61,496.86. **Staff: Director of Utilities Tom Brennan**

iv. The Utilities Department recommends Council approve, by motion, the Denver Water Board invoice for the Meadow Creek Dam Outlet Works Replacement Project in the amount of $329,878.14. **Staff: Director of Utilities Tom Brennan**

v. The Utilities Department recommends Council approve, by resolution, the Assignment of License Agreement from Wildacres, LLC for crossing the City Ditch to 2 T Acres LLC. **Staff: Director of Utilities Tom Brennan**

vi. The Community Development Department recommends Council approve, by resolution, the Finding of Fact in the matter of appeal of case #2015-09, 4635 S. Pearl St., Urban Lot Development. **Staff: Interim Community Development Director Michael Flaherty**

12. General Discussion.

a. Mayor's Choice.

b. Council Members' Choice.

i. A motion authorizing the recruitment of a new City Attorney through the use of an executive search firm RFP.

ii. Executive Session: For discussion of a personnel matter under C.R.S. Section 24-6-402(2)(f) and not involving: any specific employees who have requested discussion of the matter in open session; any member of this body or any elected official; the appointment of any person to fill an office of this body or of an elected official; or personnel policies that do not require the discussion of matters personal to particular employees.

iii. Approval of a resolution establishing the salary for the Acting City Attorney.

13. City Manager's Report.

a. CML Workshop: Effective Governance for Elected Officials Friday, Jan. 29, 8:30 a.m.- 4 p.m. in Denver.

14. City Attorney's Report.

a. Executive Session: For a conference with special counsel for the purpose of receiving legal advice on specific legal questions under C.R.S. Section 24-6-402(4)(b).

15. Adjournment.

Please note: If you have a disability and need auxiliary aids or services, please notify the City of Englewood (303-762-2405) at least 48 hours in advance of when services are needed.

DRAFT

ENGLEWOOD CITY COUNCIL
ENGLEWOOD, ARAPAHOE COUNTY, COLORADO

Regular Session
November 16, 2015

A permanent set of these minutes and the audio are maintained in the City Clerk's Office.
Minutes and streaming audios are also available on the web at:
http://www.englewoodgov.org/inside-city-hall/city-council/agendas-and-minutes

1. **Call to Order**

The regular meeting of the Englewood City Council was called to order by Mayor Pro Tem Olson at 7:29 p.m.

2. **Invocation**

The invocation was given by Council Member McCaslin.

3. **Pledge of Allegiance**

The Pledge of Allegiance was led by Council Member McCaslin.

4. **Roll Call**

Present: Council Members Jefferson, Olson, Gillit, McCaslin, Wilson, Yates
Absent: Mayor Penn
A quorum was present.

Also present: City Manager Keck
City Attorney Brotzman
Deputy City Manager Flaherty
Assistant City Manager Robinson
City Clerk Ellis
Deputy City Clerk Carlile
Director Becker, Finance and Administrative Services
Director Brennan, Utilities
Director Kahm, Public Works
Manager Vega, Human Resources
Judge Atencio, Municipal Court
Court Administrator Wolfe
Planner II Voboril, Community Development
Planner II Bell, Community Development
Deputy Police Chief Sanchez
Police Chief Collins
Police Commander Condreay
Technical Support Specialist I Munnell, Information Technology

5. **Consideration of Minutes of Previous Session**

(a) **COUNCIL MEMBER GILLIT MOVED, AND COUNCIL MEMBER WILSON SECONDED, TO APPROVE THE MINUTES OF THE REGULAR CITY COUNCIL MEETING OF NOVEMBER 2, 2015.**

Vote results:
Ayes: Council Members Yates, McCaslin, Wilson, Jefferson, Olson, Gillit
Nays: None
Absent: Mayor Penn
Motion carried.

(b) City Council Recognition and Swearing In.

(i) Mayor Pro Tem Olson asked the City Clerk to announce the status of the election.

City Clerk Ellis said, based on the Official Election Results provided by Arapahoe County, the newly elected Council Members are: Council Member District 1 Joe Jefferson, Council Member District 3 Laurett Barrentine, Council Member At-Large Rita Russell and Council Member At-Large Amy Martinez.

(ii) City Council made a determination of the election and qualifications of its membership.

COUNCIL MEMBER GILLIT MOVED, AND COUNCIL MEMBER YATES SECONDED, TO ACCEPT THE ELECTION RESULTS AS PRESENTED BY CITY CLERK ELLIS.

Vote results:
Ayes: Council Members Yates, McCaslin, Wilson, Jefferson, Olson, Gillit
Nays: None
Absent: Mayor Penn
Motion carried.

(iii) There were comments and recognition of families and guests by the departing members of City Council.

(iv) The newly-elected/re-elected City Council Members were sworn in by the Honorable Judge Vincent Atencio.

(v) Brief Reception.

Council recessed at 7:47 p.m. for a brief reception.

The meeting reconvened at 8:17 p.m.

(vi) Members of City Council were seated (in temporary spaces) and Mayor Pro Tem Olson asked the City Clerk to call the roll of City Council Members.

Roll Call:
Present: Council Members Jefferson, Olson, Barrentine, Gillit, Martinez, Russell, Yates
Absent: None
A quorum was present.

(vii) Mayor Pro Tem Olson called for nominations for Mayor.

MAYOR PRO TEM OLSON MOVED, AND COUNCIL MEMBER GILLIT SECONDED, TO NOMINATE COUNCIL MEMBER GILLIT FOR THE OFFICE OF MAYOR OF THE CITY OF ENGLEWOOD.

Vote results:
Ayes: Council Members Olson, Gillit, Martinez
Nays: Council Members Jefferson, Barrentine, Russell, Yates
Motion defeated.

MEMBER RUSSELL MOVED, AND COUNCIL MEMBER BARRENTINE SECONDED, TO NOMINATE COUNCIL MEMBER JEFFERSON FOR THE OFFICE OF MAYOR OF THE CITY OF ENGLEWOOD.

Vote results:

Ayes: Council Members Jefferson, Olson, Barrentine, Gillit, Martinez, Russell, Yates
Nays: None

Motion carried.

(viii) Mayor Jefferson assumed the Chair and called for nominations for Mayor Pro Tem.

MAYOR JEFFERSON MOVED, AND COUNCIL MEMBER YATES SECONDED, TO NOMINATE COUNCIL MEMBER GILLIT FOR THE OFFICE OF MAYOR PRO TEM OF THE CITY OF ENGLEWOOD.

Vote results:

Ayes: Council Members Jefferson, Olson, Barrentine, Gillit, Martinez, Russell, Yates
Nays: None

Motion carried.

(ix) Permanent seating assignments were selected by seniority.

The meeting recessed to reset voting panels, and nameplates, at 8:37 p.m.

The meeting reconvened at 8:40 p.m. with all members present.

(x) The newly-elected/re-elected Members of City Council recognized their families and guests present.

6. **Recognition of Scheduled Public Comment**

(a) Doug Cohn, an Englewood resident, was scheduled to address Council regarding historic preservation. He was not present.

7. **Recognition of Unscheduled Public Comment**

(a) Elaine Hults, an Englewood resident, expressed her gratitude to Council and she looks forward to new beginnings and change for the City.

(b) Jason Sakry, an Englewood resident and Englewood School Board member, welcomed all of the new members to Council. He looks forward to City Council and the School Board working together. He invited all of them to attend the School Board meetings on the 1st and 3rd Tuesdays of every month.

(c) Lester Myers, an Englewood resident, welcomed all of the new Council members and congratulated Mayor Jefferson.

Council responded to Public Comment.

8. **Communications, Proclamations and Appointments**

There were no communications, proclamations or appointments.

9. **Consent Agenda**

(a) Approval of Ordinances on First Reading

There were no additional items submitted for approval on first reading. (See Agenda Item 11 (a).)

COUNCIL MEMBER GILLIT MOVED, AND COUNCIL MEMBER OLSON SECONDED, TO APPROVE CONSENT AGENDA ITEM 9 (b) (i).

(b) Approval of Ordinances on Second Reading

(i) ORDINANCE NO. 52, SERIES OF 2015 (COUNCIL BILL NO. 56, INTRODUCED BY COUNCIL MEMBER OLSON

AN ORDINANCE AUTHORIZING A MEMORANDUM OF UNDERSTANDING 2015 - 2019 BETWEEN ARAPAHOE COUNTY DEPARTMENT OF HUMAN SERVICES DIVISION OF CHILDREN, YOUTH AND FAMILY SERVICES AND ARAPAHOE COUNTY SHERIFF'S OFFICE, ARAPAHOE COMMUNITY COLLEGE CAMPUS POLICE DEPARTMENT, AURORA POLICE DEPARTMENT, TOWN OF BOW MAR POLICE DEPARTMENT, CHERRY HILLS VILLAGE POLICE DEPARTMENT, GLENDALE POLICE DEPARTMENT, COLUMBINE VALLEY POLICE DEPARTMENT, GREENWOOD VILLAGE POLICE DEPARTMENT, LITTLETON POLICE DEPARTMENT, SHERIDAN POLICE DEPARTMENT AND THE ENGLEWOOD POLICE DEPARTMENT TO PROVIDE A COOPERATIVE WORKING RELATIONSHIP BETWEEN LAW ENFORCEMENT AND CHILD PROTECTION AGENCIES IN ARAPAHOE COUNTY TO PROTECT ENDANGERED CHILDREN.

Vote results:
Ayes: Council Members Jefferson, Olson, Barrentine, Gillit, Martinez, Russell, Yates
Nays: None
Motion carried.

(c) Resolutions and Motions

There were no resolutions or motions submitted for approval. (See Agenda Item 11 (c).)

10. **Public Hearing Items**

(a) **COUNCIL MEMBER GILLIT MOVED, AND COUNCIL MEMBER OLSON SECONDED, TO OPEN THE PUBLIC HEARING TO GATHER INPUT CONCERNING THE APPEAL OF CASE 2015-09 4635 S. PEARL STREET – URBAN LOT DEVELOPMENT.**

Vote results:
Ayes: Council Members Jefferson, Olson, Barrentine, Gillit, Martinez, Russell, Yates
Nays: None
Motion carried and the Public Hearing opened.

All testimony was given under oath.

Planner II Bell presented background information regarding the appeal of case 2015-09 4635 S. Pearl Street – urban lot development.

Those providing public comment were: Christine Martin, Amber Alsadi, Cassandra Letkomiller and Jeremy Letkomiller.

COUNCIL MEMBER GILLIT MOVED, AND COUNCIL MEMBER OLSON SECONDED, TO CLOSE THE PUBLIC HEARING TO GATHER INPUT CONCERNING THE APPEAL OF CASE 2015-09 4635 S. PEARL STREET – URBAN LOT DEVELOPMENT.

Vote results:
Ayes: Council Members Jefferson, Olson, Barrentine, Gillit, Martinez, Russell, Yates
Nays: None
Motion carried and the Public Hearing closed.

COUNCIL MEMBER GILLIT MOVED, AND COUNCIL MEMBER OLSON SECONDED, TO ACCEPT THE FINDINGS OF THE PLANNING AND ZONING COMMISSION AND TO DENY THE APPEAL.

Vote results:
Ayes: Council Members Olson, Gillit, Martinez, Yates
Nays: Council Members Jefferson, Barrentine, Russell
Motion carried.

11. **Ordinances, Resolutions and Motions**

(a) Approval of Ordinances on First Reading

(i) Interim Community Development Director Michael Flaherty presented a recommendation from the Community Development Department to approve a bill for an ordinance approving a six-month extension on the marijuana social club moratorium.

COUNCIL MEMBER GILLIT MOVED, AND COUNCIL MEMBER OLSON SECONDED, TO APPROVE AGENDA ITEM 11 (a) (i) - COUNCIL BILL NO. 59.

COUNCIL BILL NO. 59, INTRODUCED BY COUNCIL MEMBER GILLIT

A BILL FOR AN ORDINANCE EXTENDING THE EMERGENCY MORATORIUM ON THE ESTABLISHMENT OF NEW MARIJUANA CONSUMPTION ESTABLISHMENTS FOR AN ADDITIONAL SIX MONTH PERIOD.

Vote results:
Ayes: Council Members Jefferson, Olson, Barrentine, Gillit, Martinez, Russell, Yates
Nays: None
Motion carried.

(b) Approval of Ordinances on Second Reading

(i) Council Bill 57 - A new Official Corporate City Seal, by adding the recently approved logo was considered.

COUNCIL MEMBER GILLIT MOVED, AND COUNCIL MEMBER MARTINEZ SECONDED, TO APPROVE AGENDA ITEM 11 (b) (i) - ORDINANCE NO. 53, SERIES OF 2015.

ORDINANCE NO. 53, SERIES OF 2015 (COUNCIL BILL NO. 57, INTRODUCED BY COUNCIL MEMBER OLSON)

AN ORDINANCE AMENDING TITLE 1, CHAPTER 9, SECTIONS 2 AND 3, OF THE ENGLEWOOD MUNICIPAL CODE 2000 PERTAINING TO THE OFFICIAL CORPORATE CITY SEAL.

Vote results:
Ayes: Council Members Olson, Gillit, Martinez, Yates
Nays: Council Members Jefferson, Barrentine, Russell
Motion carried.

(c) Resolutions and Motions

(i) Deputy City Manager Michael Flaherty presented a recommendation to approve a resolution approving the extension of the agreement with the Humane Society of South Platte Valley for continuation of animal sheltering services.

COUNCIL MEMBER OLSON MOVED, AND COUNCIL MEMBER RUSSELL SECONDED, TO APPROVE AGENDA ITEM 11 (c) (i) - RESOLUTION NO. 98, SERIES OF 2015.

RESOLUTION NO. 98, SERIES OF 2015

A RESOLUTION APPROVING AN ADDENDUM FOR RENEWAL OF THE "CITY OF ENGLEWOOD AGREEMENT FOR ANIMAL SHELTERING SERVICES" BETWEEN THE CITY OF ENGLEWOOD AND THE HUMANE SOCIETY OF SOUTH PLATTE VALLEY.

Vote results:

Ayes: Council Members Jefferson, Olson, Barrentine, Gillit, Martinez, Russell, Yates
Nays: None

Motion carried.

12. **General Discussion**

(a) Mayor's Choice

(i) **COUNCIL MEMBER GILLIT MOVED, AND COUNCIL MEMBER YATES SECONDED, TO MOVE AGENDA ITEM 14 (a) UNDER MAYORS CHOICE.**

Vote results:

Ayes: Council Members Jefferson, Olson, Barrentine, Gillit, Martinez, Russell, Yates
Nays: None

Motion carried.

COUNCIL MEMBER GILLIT MOVED, AND COUNCIL MEMBER OLSON SECONDED, TO APPOINT MARTIN SEMPLE AS SPECIAL COUNSEL UNDER SECTION 67 OF THE HOME RULE CHARTER TO ADVISE CITY COUNCIL CONCERNING MATTERS SUBJECT TO SECTION 67.

Vote results:

Ayes: Council Members Jefferson, Olson, Gillit, Martinez
Nays: Council Members Barrentine, Russell, Yates

Motion carried.

(b) Council Members' Choice

(i) A resolution authorizing funding for local non-profits in 2016 was considered.

COUNCIL MEMBER OLSON MOVED, AND COUNCIL MEMBER GILLIT SECONDED, TO APPROVE RESOLUTION NO. 99, SERIES OF 2015.

RESOLUTION NO. 99, SERIES OF 2015

A RESOLUTION SPECIFYING AID TO OTHER AGENCIES FOR 2016 BY THE CITY OF ENGLEWOOD. COLORADO.

Vote results:

Ayes: Council Members Jefferson, Olson, Gillit, Martinez, Yates
Nays: Council Members Barrentine, Russell

Motion carried.

(ii) **COUNCIL MEMBER YATES MOVED, AND COUNCIL MEMBER RUSSELL SECONDED, TO ACCEPT CITY ATTORNEY BROTZMAN'S RESIGNATION EFFECTIVE AS OF TODAY.**

Vote results:

Ayes: Council Members Jefferson, Barrentine, Gillit, Russell, Yates
Nays: Council Members Olson, Martinez

Motion carried.

(iii) **COUNCIL MEMBER GILLIT MOVED, AND COUNCIL MEMBER BARRENTINE SECONDED, TO APPOINT DEPUTY CITY ATTORNEY COMER TO ACTING CITY ATTORNEY.**

Vote results:
Ayes: Council Members Jefferson, Olson, Barrentine, Gillit, Martinez, Russell, Yates
Nays: None
Motion carried.

(iv) Council Bill 58 – Amending, on second reading, Title 6, Chapter 1, Section 8, of the Englewood Municipal Code 2000 adopting smoking prohibitions, state standards, further defining public buildings and unifying the definition of tobacco throughout the code was considered.

COUNCIL MEMBER GILLIT MOVED, AND COUNCIL MEMBER OLSON SECONDED, TO APPROVE COUNCIL BILL NO. 58 ON SECOND READING.

COUNCIL MEMBER GILLIT WITHDREW HIS MOTION.

COUNCIL MEMBER GILLIT MOVED, AND COUNCIL MEMBER OLSON SECONDED, TO CONTINUE THIS ITEM TO THE DECEMBER 7, 2015 CITY COUNCIL MEETING.

Vote results:
Ayes: Council Members Jefferson, Olson, Barrentine, Gillit, Martinez, Russell, Yates
Nays: None
Motion carried.

(v) A resolution increasing the City Manager's salary by 3% and a one-time $3,000 bonus was considered.

COUNCIL MEMBER GILLIT MOVED, AND COUNCIL MEMBER OLSON SECONDED, TO APPROVE RESOLUTION NO. 100, SERIES OF 2015.

RESOLUTION NO. 100, SERIES OF 2015

A RESOLUTION INCREASING THE ANNUAL SALARY FOR THE CITY MANAGER OF THE CITY OF ENGLEWOOD, COLORADO FOR THE CALENDAR YEAR 2016.

Vote results:
Ayes: Council Members Jefferson, Olson, Gillit, Martinez, Yates
Nays: None
Abstain: Council Members Barrentine, Russell
Motion carried.

13. **City Manager's Report**

City Manager Keck did not have any matters to bring before Council.

14. **City Attorney's Report**

(a) City Attorney Brotzman was scheduled to present a request to appoint Martin Semple as Special Counsel under Section 67 of the Home Rule Charter to advise City Council concerning matters subject to Section 67.

[Clerk's Note: This item was moved forward under Mayor's Choice, Agenda Item 12 (a) (i).]

15. **Adjournment**

MAYOR JEFFERSON MOVED TO ADJOURN. The meeting adjourned at 11:10 p.m.

/s/ Loucrishia A. Ellis
City Clerk

PROCLAMATION

WHEREAS, the first ten Amendments to the Constitution of the United States of America, known as the Bill of Rights, were ratified on December 15, 1791; and

WHEREAS, December 15, 2015 marks the two hundred and twenty-fourth anniversary of the ratification of the Bill of Rights to the United States Constitution; and

WHEREAS, the Bill of Rights recognizes, affirms and protects fundamental human and civil rights for which persons of all races have struggled for thousands of years; and

WHEREAS, the Bill of Rights is the foundation of American liberty, securing our most fundamental rights including the freedom to speak, assemble, and practice our faith as we please; and

WHEREAS, to preserve the rights and freedoms secured by the Bill of Rights, our forefathers, and hundreds of thousands of men and women serving with police agencies and the Armed Forces of the United States, have sacrificed, suffered and died; and

WHEREAS, the rights and freedoms guaranteed by the Bill of Rights deserve perennial celebration and the sacrifices made to protect the Bill of Rights deserve eternal remembrance; and

WHEREAS, to commemorate the Bill of Rights with a special day honoring the fundamental rights it enshrines and the sacrifices made to create and preserve these rights, and proclaims these rights to the citizens of the Englewood, to this Nation, and to the World; and

NOW THEREFORE, I, Joe Jefferson, Mayor of the City of Englewood, Colorado, hereby proclaims **December 15th, 2015** as:

BILL OF RIGHTS DAY

and urge all citizens of Englewood, Colorado, to observe Bill of Rights Day in a manner that brings to mind the meaning and importance of each of the Ten Amendments contained in the Bill of Rights.

GIVEN under my hand and seal this 7th day of December, 2015.

Joe Jefferson, Mayor

Nancy Fritz

From: Leigh Ann Hoffhines
Sent: Tuesday, November 24, 2015 11:20 AM
To: Nancy Fritz
Cc: Dugan Comer
Subject: Bill of Rights Day
Attachments: 2014 Englewood BoR Proclamation.pdf; Bill of Rights.doc; 151106 C Coffman Flier.pdf; 2014GovHickBillofRightsLtr.pdf

Here's the info we received on the Bill of Rights Day proclamation request. I believe this will be included on the December 7 City Council Agenda.

Thanks, Leigh Ann

From: Andy McKean [mailto:andy@libertyday.org]
Sent: Wednesday, November 18, 2015 11:44 AM
To: Council
Subject: City Council

Dear Englewood City Council and Mayor Penn,

Would Mayor Penn again Proclaim Bill of Rights Day In Englewood (see attached). Also, would the Mayor and City Council members volunteer to visit classes in Englewood Schools, at any grade level, to give students their own free copy of the Bill of Rights (attached), encourage them to read and study them, and give copies of the Bill of Rights to citizens in Englewood?

My landline is: Maybe you can reach out to students for Attorney General Cynthia Coffman's event on Bill of Rights Day, December 15th (attached)? Governor Hickenlooper is considering recording a message to the people of Colorado for Bill of Rights Day.

Andy McKean
Founder and President Emeritus
The Liberty Day Institute
www.LibertyDay.org

*Rings both my office and home office simultaneously

Liberty Day

STATE OF COLORADO

EXECUTIVE CHAMBERS

136 State Capitol
Denver, CO 80203 - 1792

John Hickenlooper
Governor

December 15, 2014

Andy McKean
Founder and President Emeritus
The Liberty Day Institute

Denver, Colorado 80231

Dear Mr. McKean:

On behalf of the State of Colorado, it is my distinct pleasure to support the Liberty Day Institute in its efforts to increase civic literacy among the young people of our State.

Today marks the 223rd anniversary of the date when the Bill of Rights was ratified, and as such, it provides a fitting moment to learn and reflect on the cherished rights and duties embodied in the first ten amendments to the United States Constitution. By encouraging students to not only better understand this important document, but to also share and discuss it with their friends and family members, you are helping to plant the seeds of civic engagement in the next generation.

Once again, I thank you for everything you do to help educate and empower young people. You have my best wishes now, and in the years to come. Keep up the good work!

Sincerely,

John W. Hickenlooper
Governor

PROCLAMATION

WHEREAS, the first ten Amendments to the Constitution of the United States of America, known as the Bill of Rights, were ratified on December 15, 1791; and

WHEREAS, December 15, 2014 marks the two hundred and twenty-third anniversary of the ratification of the Bill of Rights to the United States Constitution; and

WHEREAS, the Bill of Rights recognizes, affirms and protects fundamental human and civil rights for which persons of all races have struggled for thousands of years; and

WHEREAS, the Bill of Rights is the foundation of American liberty, securing our most fundamental rights including the freedom to speak, assemble, and practice our faith as we please; and

WHEREAS, to preserve the rights and freedoms secured by the Bill of Rights, our forefathers, and hundreds of thousands of men and women serving with police agencies and the Armed Forces of the United States, have sacrificed, suffered and died; and

WHEREAS, the rights and freedoms guaranteed by the Bill of Rights deserve perennial celebration and the sacrifices made to protect the Bill of Rights deserve eternal remembrance; and

WHEREAS, to commemorate the Bill of Rights with a special day honoring the fundamental rights it enshrines and the sacrifices made to create and preserve these rights, and proclaims these rights to the citizens of the Englewood, to this Nation, and to the World; and

NOW THEREFORE, I, Randy P. Penn, Mayor of the City of Englewood, Colorado, hereby proclaims **December 15th, 2014** as:

BILL OF RIGHTS DAY

and urge all citizens of Englewood, Colorado, to observe Bill of Rights Day in a manner that brings to mind the meaning and importance of each of the Ten Articles contained in the Bill of Rights.

GIVEN under my hand and seal this 15th day of December, 2014.

Randy P. Penn, Mayor

COUNCIL COMMUNICATION

Meeting Date:	Agenda Item:	Subject:
Monday, December 7, 2015	9ai	NetDMR Subscriber Agreement
Initiated By:	**Staff Source:**	
Littleton/Englewood Wastewater Treatment Plant (L/E WWTP)	Dennis W. Stowe, Littleton/Englewood Wastewater Treatment Plant Manager Mary Gardner, Environmental Compliance Division Manager	

PREVIOUS COUNCIL ACTION

No previous council action taken.

RECOMMENDED ACTION

The Littleton/Englewood Supervisory Committee recommended on November 19, 2015, Council approve by Ordinance the Intergovernmental Agreement for NetDMR between the Littleton/Englewood Wastewater Treatment Plant (L/E WWTP) and Colorado Department of Public Health and Environment, Water Quality Control Division (CDPHE WQCD) for the Clean Water Act National Pollutant Discharge Elimination System (CWA NPDES) permit-required electronic reporting of the Discharge Monitoring Reports (DMR).

BACKGROUND, ANALYSIS, AND ALTERNATIVES IDENTIFIED

The NetDMR Subscriber Agreement allows the L/E WWTP online access to submit required DMRs for the L/E WWTP's CWA NPDES permit. Electronic submission of DMRs fulfills the requirements of the CWA NPDES program pursuant to 40 CFR 122.4(1)(4).

FINANCIAL IMPACT

No financial impact

LIST OF ATTACHMENTS

NetDMR Subscriber Agreement

BY AUTHORITY

ORDINANCE NO. ____
SERIES OF 2015

COUNCIL BILL NO. 60
INTRODUCED BY COUNCIL
MEMBER _____

A BILL FOR

AN ORDINANCE APPROVING AN INTERGOVERNMENTAL AGREEMENT (IGA) "NetDMR SUBSCRIBER AGREEMENT" BETWEEN THE COLORADO CDPHE WQCD (REGULATORY AUTHORITY) AND THE LITTLETON/ENGLEWOOD WASTEWATER TREATMENT PLANT.

WHEREAS, the "NetDMR Subscriber Agreement" is used by Clean Water Act National Pollutant Discharge Elimination System (NPDES) permit holders who submit Discharge Monitoring Reports (DMRs) and other NPDES permit-required reports electronically, or change/update reporting status information from a previously-submitted application; and

WHEREAS, to abide by the terms and conditions for use of the NetDMR System by use of the assigned electronic signature as a hand-written signature; and

WHEREAS, the "NetDMR Subscriber Agreement" allows the Littleton/Englewood Wastewater Treatment Plant (L/E WWTP) online access to submit the L/E WWTP's required Discharge Monitoring Reports (DMR) for L/E WWTP's Clean Water Act National Pollutant Discharge Elimination System (NPDES) Permit; and

WHEREAS, submission of DMR's electronically is required to fulfill the reporting requirements of the Clean Water Act NPDES program pursuant to 40 CFR 122.41(1)(4); and

WHEREAS, the L/E WWTP is required to comply with electronic DMR reporting no later than January 1, 2016.

NOW, THEREFORE, BE IT ORDAINED BY THE CITY COUNCIL OF THE CITY OF ENGLEWOOD, COLORADO, AS FOLLOWS:

Section 1. The City Council of Englewood, Colorado, hereby approves the Intergovernmental Agreement "NetDMR Subscriber Agreement" between the Colorado CDPHE WQCD (Regulatory Authority) and the Littleton/Englewood Wastewater Treatment Plant, a copy of which is attached hereto as Exhibit A.

Section 2. The Mayor is hereby authorized to sign the Intergovernmental "NetDMR Subscriber Agreement" between the Colorado CDPHE WQCD (Regulatory Authority) and the Littleton/Englewood Wastewater Treatment Plant (L/E WWTP), a copy of which is attached for and on behalf of the City of Englewood.

Section 3. The Mayor, pursuant to 40 CFR 122.22(a)(3), being the ranking elected official may authorize the Littleton/Englewood Wastewater Treatment Plant Manager to sign permit applications and reports, pursuant to the "NetDMR Subscriber Agreement", including required discharge monitoring reports for the L/E WWTP's Clean Water Act National Pollutant Discharge Elimination System (NPDES) Permit.

Section 4. Pursuant to 40 CFR 122.22 (a)(3)(b)(1-2) the authorization shall be in writing by the Mayor and shall specify the position having responsibility for the overall operation of the regulated facility.

Section 5. The Mayor hereby authorizes the Littleton/Englewood Wastewater Treatment Plant Manager to sign permit applications and reports pursuant to the "NetDMR Subscriber Agreement", including required discharge monitoring reports for the L/E WWTP's Clean Water Act National Pollutant Discharge Elimination System (NPDES) Permit.

Introduced, read in full, and passed on first reading on the 7th day of December, 2015.

Published by Title as a Bill for an Ordinance in the City's official newspaper on the 10th day of December, 2015.

Published as a Bill for an Ordinance on the City's official website beginning on the 9th day of December, 2015 for thirty (30) days.

_____
Joe Jefferson, Mayor

ATTEST:

_____
Loucrishia A. Ellis, City Clerk

I, Loucrishia A. Ellis, City Clerk of the City of Englewood, Colorado, hereby certify that the above and foregoing is a true copy of a Bill for an Ordinance, introduced, read in full, and passed on first reading on the 7th day of December, 2015.

_____
Loucrishia A. Ellis

EXHIBIT A

Agency: *Colorado DPHE WQCD*
Subscriber Agreement Number: *75496741-1651-420b-9d8a-2c6e1b86bd52*
Generated On: *2015-10-13 11:31:50.0*
Account Reference: *14889*

NetDMR Subscriber Agreement Instructions Page
This form can be used for permits issued by: Colorado DPHE WQCD, hereafter referred to as "the Regulatory Authority".

Purpose

The NetDMR Subscriber Agreement should be used by Clean Water Act National Pollutant Discharge Elimination System (NPDES) permit holders that would like to apply to submit Discharge Monitoring Reports (DMRs) and other NPDES permit-required reports electronically, or change/update your reporting status information from a previously-submitted application. Submission of DMRs electronically is an alternative to using paper forms to fulfill the reporting requirements of the CWA NPDES program pursuant to 40 CFR 122.41(l)(4).

Basic Information on Who Should Fill Out the Subscriber Agreement

- To request use of electronic reporting for DMR information, the Responsible Official, the person who has the authority to sign permit applications, reports, and other permit-required submittals (e.g., DMRs) as described in 40 CFR §122.22 (a), can designate themselves or identify a duly authorized representative to electronically sign the DMRs for the facility.
- If the Responsible Official plans to electronically sign DMRs submitted through NetDMR, then the Responsible Official will also sign as the Signatory Authority named in Section F of the Subscriber Agreement.
- If the Responsible Official plans to authorize someone else to sign and submit the electronic DMRs as described in 40 CFR §122.22(b), the Responsible Official will sign Section E and the duly authorized representative will sign as the Signatory Authority identified in Section F.
- If the authority to electronically sign for a permit is to be delegated to multiple Signatory Authorities, then each individual Signatory Authority needs to submit and sign a separate Subscriber Agreement.
- This Subscriber Agreement cannot be used to register multiple permits that are issued by different regulatory authorities.

How to Submit the Subscriber Agreement

Print and sign this form, save a copy for your records, and mail the completed Subscriber Agreement below to your Clean Water Act Regulatory Authority for their review at the address below.

Colorado DPHE WQCD
Attn: Data Management Supervisor
WOCD-OP-B2

Denver, CO 80246-1530

You will receive a confirmation email from the Regulatory Authority when your application has been processed and approved. For assistance or questions please contact Colorado DPHE WQCD at 303-691-4046 or CDPHE.WQNetDMRHelp@state.co.us.

A. Signatory Authority Information

The Signatory Authority is the individual that intends to sign DMRs and signs this Subscriber Agreement in Section F.

User Name: dwstowe
Subscriber Name: Dennis Stowe
Organization: Littleton Englewood WWTP
Email Address:
Phone Number:

B. Permit Information

Signing privileges are requested for the following permits:

Permit ID	Facility Name	Facility Address	Relationship	Authorized By
CO0032999	LITTLETON/ENGLEWOOD, CITIES OF	2900 SOUTH PLATTE RIVER DR ENGLEWOOD, CO 80110	Parent	Self

This request is (check one):

☐ NEW: a new user request by this facility to use NetDMR reporting

☐ REQUEST FOR REACTIVATION: a User ID re-activation of NetDMR reporting for a facility that had discontinued using NetDMR

☐ CONTINUATION WITH NEW AUTHORIZATION: an updated Subscriber Agreement submitted because a new Responsible Official and/or Signatory Authority has been identified at the facility

☐ RENEWAL: an updated form submitted when a permit application is submitted
Permit ID(s): _____

☐ INACTIVATION: Explain reason for inactivation in the box below and identify whether the inactivation is temporary or permanent
Permit ID(s): _____

Notes to Permitting Authority (Optional unless Inactivating):

C. Terms and Conditions

- PURPOSE: This agreement creates a legally binding obligation for the signer of the Agreement (the Responsible Official and/or Signatory Authority) to abide by the terms and conditions for use of the NetDMR System, and memorializes a mutual understanding that the signer of this agreement is as legally bound, obligated, and responsible by use of the assigned electronic signature as by a hand-written signature.

- ACCEPTANCE & EFFECT: Acceptance of this agreement by the Regulatory Authority shall be evidenced by notice from the Regulatory Authority, provided electronically, that this agreement has been approved.

- SUBMITTAL & RECEIPT: A Document shall be deemed to have been submitted when it is accessible to the Regulatory Authority. A document shall be deemed to have been received when it can be fully processed. No document shall satisfy any reporting requirement until it is received.

- VERIFICATION: In accordance with the associated certification statement, the signer of the Agreement is responsible for the truth and accuracy of the content of each submission. The signer of the Agreement also has an affirmative obligation to check the accuracy of the document as received by the Regulatory Authority and to notify the Regulatory Authority promptly if the document was sent without authorization or differs in substance in any way from the document that was submitted.

- INABILITY TO TRANSMIT OR FILE REPORTS ELECTRONICALLY: No party shall be liable for any failure to perform its obligations in connection with any Electronic Transaction or any Electronic Document, where such failure results from any act or cause beyond such party's control which prevents such party from electronically transmitting or receiving any Documents, except that the signer of the Agreement (Responsible Official and/or Signatory Authority) is nonetheless required to submit records or information required by law via other means, as provided by applicable law and within the time period provided by such law.

- SEVERABILITY: Any provision of the Agreement which is determined to be invalid or unenforceable will be ineffective to the extent of such determination without invalidating the remaining provisions of this Agreement or affecting the validity or enforceability of such remaining provisions.

- TERMINATION AND RENEWAL: The Agreement may be terminated at any time by the Regulatory Authority. Upon termination of this agreement, the associated ability to submit electronic information through the NetDMR system will be terminated. The Regulatory Authority will provide notification of termination, including the date on which termination takes effect. A new Responsible Official and/or Signatory Authority must resubmit this form at the time that a new permit application is submitted or when Responsible Official and/or Signatory Authority responsibility transfers from one person to another.

-Note: Termination of this agreement may eliminate the ability to comply with permit requirements for any continuing operations. Paper DMR Reports will only be accepted under this permit where the permittee has provided sufficient justification and obtained prior approval from the Regulatory Authority.

- GOVERNING LAW: This Agreement shall be governed by and interpreted in accordance with 40 CFR §122 and 40 CFR §3.

- AGREEMENT:
  1. I agree to protect the electronic signature device, consisting of my NetDMR system user name and password, from use by anyone except me. Specifically, I agree to maintain the secrecy of my password and security- and challenge-question answers; I will not divulge or delegate my user name and password to any other individual; I will not write or save my password or challenge question/answer pairs to a script or other mechanism that allows its use or application by someone other than me;
  2. I agree to contact the Regulatory Authority Colorado DPHE WQCD at 303-691-4046 or CDPHE.WQNetDMRHelp@state.co.us within 24 hours if any of the following occurs:
     - suspicion or determination that my user name, password, security question answer, or challenge question answers may have been lost, stolen or otherwise compromised;
     - receipt of an e-mail notification for any activity that I do not believe that I performed;
     - if, after receipt of COR, there is any evidence of discrepancy between any electronic document I have signed and submitted and what the NetDMR system has received from me;
     - if I do not receive an e-mail notification within 24 hours for any submission electronically signed using my credentials; or
     - if I cease to represent the regulated entity specified above as signatory of that organization's electronic submissions.
  3. I understand and agree that I will be held as legally bound, obligated, and responsible for the use of my electronic signature as I would be using my hand-written signature;
  4. I understand that I will be informed through my registered electronic mail (e-mail) address whenever my user name, password, or challenge question/answer pairs have been modified;
  5. I agree to provide and maintain an email address by which to receive communications from the NetDMR system. I understand that this account must be accessible only by me and that I have an affirmative obligation to check this email account regularly. If any email sent to me by the NetDMR system is returned as undeliverable, I will explain why this occurred when requested by the Colorado DPHE WQCD;
  6. I understand that the NetDMR system reports the last date my user name and password were used immediately after successfully logging in to the system;
  7. I understand that whenever I electronically sign and submit an electronic document to the NetDMR system, I will receive an e-mail at my registered e-mail address; This e-mail will inform me that a submission has been made to the system from my user account and will contain instructions to view information regarding the submission, including the Copy of Record (COR) for the submission; and
  8. I agree to retain a copy of this signed agreement as long as I continue to represent the regulated entity specified above as signatory of the company's electronic submissions.

D. Inactivation/Removal

Permittee must indicate reason for inactivation in Section B of the form. This is done to inform the Regulatory Authority whether the permittee is no longer in business or has a temporary reason for inactivation.

E. Responsible Official Authorization

The Responsible Official is the appropriate individual identified under 40 CFR §122.22(a) with the authority to sign permit applications, reports, and other permit-required submittals (e.g., DMRs). The Responsible Official can also delegate the authority to electronically sign DMRs to a duly authorized representative(s) as described in 40 CFR §122.22(b).

F. Signatory Authority Signature

The Signatory Authority is the NetDMR user that submits this agreement to request approval to electronically sign DMRs. The Signatory Authority has the authority to sign DMRs under 40 CFR §122.22(a) or is a duly authorized representative(s) who has been delegated the authority to electronically sign DMRs by the Responsible Official as described in 40 CFR §122.22(b).

Permit ID: CO0032999

I, Dennis Stowe, have the authority to enter into this Agreement for LITTLETON/ENGLEWOOD, CITIES OF and Permit ID CO0032999 under the applicable standards.

By submitting this application for CO0032999, I, Dennis Stowe, have read, understand, and accept the terms and conditions of this subscriber agreement. I certify under penalty of law that I have personally examined and am familiar with the information submitted in this application and all attachments and that, based on my inquiry of those persons immediately responsible for obtaining the information contained in the application, I believe that the information is true, accurate and complete. I am aware that there are significant penalties for submitting false information, including the possibility of fine and imprisonment.

Signatory Authority Signature	Title	Date

Print this form, save a copy for your records, and mail to:
Colorado DPHE WQCD
Attn: Data Management Supervisor
WQCD-OP-B2

Checklist - Regulatory Authority Use Only:

Check	Information	Name	Date
	Form Received by		
	Verified ICIS-NPDES Permit Limits		
	Regulatory Authority Approves NetDMR Authorization		
	ICIS-NPDES NetDMR Flag Populated		
	User Approved in NetDMR Application		
	Notification to User		
	Inactivated?		

COUNCIL COMMUNICATION

Meeting Date:	Agenda Item:	Subject:
December 7, 2015	9aii	Colorado Dept. of Transportation E-Citation Grant

Initiated By:	Staff Source:
Police Department	Deputy Chief Jeff Sanchez

PREVIOUS COUNCIL ACTION

N/A

RECOMMENDED ACTION

The Police Department is recommending that City Council adopt a bill for an ordinance on first reading authorizing the Englewood Police Department to accept grant funding from the Colorado Department of Transportation (CDOT) 405C Traffic Records Program for an E-Ticketing system.

BACKGROUND, ANALYSIS, AND ALTERNATIVES IDENTIFIED

The Police Department submitted an application to the Colorado Department of Transportation (CDOT) 405C Traffic Records Program to purchase an E-Ticketing system that would be used by Patrol, Traffic and Parking Control. We were recently notified that we were selected to receive grant funding.

An electronic ticketing system will help improve the completeness, accuracy, and uniformity of citations written by our officers; eliminate the need for manual entry into our Records Management System (RMS); and will eliminate the need for citations to be hand-delivered to the courts.

FINANCIAL IMPACT

The total amount of the grant is $94,356.25. CDOT will pay 80% of the costs = $75,485.00. (We will initially be responsible for paying the vendor and will then request reimbursement from CDOT.)

The Police Dept. is required to provide a 20% match which equals $18,871.25. Our match will consist of personnel salaries during the implementation of the system, to include training, testing and initial use.

LIST OF ATTACHMENTS

Bill for an Ordinance

Colorado Dept. of Transportation - Traffic Records Unit - FY16 Funding Application – 405 C
Colorado Dept. of Transportation - Purchase Order

BY AUTHORITY

ORDINANCE NO. ____
SERIES OF 2015

COUNCIL BILL NO. 62
INTRODUCED BY COUNCIL
MEMBER _____

A BILL FOR

AN ORDINANCE APPROVING AN APPLICATION AND AUTHORIZING THE ACCEPTANCE OF THE COLORADO DEPARTMENT OF TRANSPORTATION (CDOT) TRAFFIC RECORDS UNIT FY16 FUNDING APPLICATION – 405C, BETWEEN THE CITY OF ENGLEWOOD, COLORADO AND THE STATE OF COLORADO DEPARTMENT OF TRANSPORTATION.

WHEREAS, an electronic ticketing system will help improve the completeness, accuracy, and uniformity of citations written by our officers; eliminate the need for manual entry into their Records Management System (RMS) and eliminate the need for citations to be hand-delivered to the courts; and

WHEREAS, the Englewood Police Department submitted an application to the Colorado Department of Transportation (CDOT) 405C Traffic Records Program to purchase an E-Ticketing system that would be used by Patrol, Traffic and Parking Control and have been notified that they were selected to receive grant funding; and

WHEREAS, the passage of this Ordinance will approve the application and authorize the acceptance of the CDOT Traffic Records Unit FY16 Grant Funding; and

WHEREAS, the total amount of the Grant is $94,356.25 – CDOT will pay 80% = $75,485.00, the City will provide 20% match = $18,871.25, the match will consist of personnel salaries during the implementation of the system, to include training, testing and initial use.

NOW, THEREFORE, BE IT ORDAINED BY THE CITY COUNCIL OF THE CITY OF ENGLEWOOD, COLORADO, THAT:

Section 1. The City Council of the City of Englewood, Colorado hereby authorizes application for the Colorado Department of Transportation (CDOT) FY16 Funding Application – 405C Traffic Records Program Grant for an E-Ticketing system for funds up to $75,485.00, attached hereto as Exhibit A.

Section 2. The City Council of the City of Englewood, Colorado hereby authorizes the acceptance of the Colorado Department of Transportation (CDOT) 405C Traffic Records Program Grant for an E-Ticketing system Purchase Order, attached hereto as Exhibit B.

Section 3. The Mayor is hereby authorized to sign the acceptance of the Colorado Department of Transportation (CDOT) 405C Traffic Records Program Grant for an E-Ticketing system for and on behalf of the City of Englewood, Colorado.

Introduced, read in full, and passed on first reading on the 7th day of December, 2015.

Published by Title as a Bill for an Ordinance in the City's official newspaper on the 10th day of December, 2015.

Published as a Bill for an Ordinance on the City's official website beginning on the 9th day of December, 2015 for thirty (30) days.

_____
Joe Jefferson, Mayor

ATTEST:

_____
Loucrishia A. Ellis, City Clerk

I, Loucrishia A. Ellis, City Clerk of the City of Englewood, Colorado, hereby certify that the above and foregoing is a true copy of a Bill for an Ordinance, introduced, read in full, and passed on first reading on the 7th day of December, 2015.

_____
Loucrishia A. Ellis

COLORADO
Department of Transportation
Transportation Systems
Management & Operations

EXHIBIT A

COLORADO DEPARTMENT OF TRANSPORTATION (CDOT)
Traffic Records Unit
FY16 Funding Application – 405 C

Application Due Date:
February 15, 2015

Application Submittal:
Submit application electronically, in Word format, via e-mail to

AND mail or deliver two signed hardcopies to the address listed below. The hardcopy applications **MUST** contain a signature, the electronic version does not require a signature.

Colorado Department of Transportation; Attn: Alisa Babler
HQ Safety and Traffic Engineering Branch; Traffic Records Unit

Please send all questions by email to the addresses noted above.

COLORADO
Department of Transportation
Transportation Systems
Management & Operations

PART 1
Introduction

Project title: Electronic Ticketing Program

Check the performance measure area(s) that is addressed by this project:

- ☐ Crash
- ☒ Citation/Adjudication
- ☐ Emergency Medical Services
- ☐ Vehicle
- ☐ Driver
- ☐ Roadway

Check the emphasis area(s) that best describes the focus of this project:
(Separate applications need to be submitted for more than one project)

- ☒ Timeliness
- ☒ Accuracy
- ☒ Completeness
- ☒ Uniformity
- ☐ Accessibility
- ☐ Integration

Applicant Agency/Organization: Englewood Police Department

Applicant Project Director: Jeffery L. Sanchez (*Name*) Deputy Police Chief (*Title*)

Address *City/Zip* *email* *telephone*

COLORADO
Department of Transportation
Transportation Systems
Management & Operations

PART 2
Description of Activity and Budget

In this section, describe the following six topics in narrative form. The narrative for all topics may not exceed six single-sided pages – the page limit **does not include** the budget pages or budget narrative. Use at least a 12-point font. Hand-written applications will not be accepted.

1) Problem Identification - *Describe the problem to be addressed, supported by current and relevant local data. Define your target population and describe how they are impacted by this problem. Use data specific to the local area and the target population the project intends to serve. Please refer to http://www.coloradodot.info/business/grants/safetygrants - for data sources and more information. Data points that serve as a baseline measure to evaluate your project impact on the target population and local area must be included.*

Currently, our officers use handwritten citations when making traffic stops. These citations are then reviewed by a supervisor before they are hand-delivered to our Records Unit. Records personnel then enter citation data into our Records Management System (RMS) before they are then hand-delivered to either Municipal Court or the Arapahoe County Court for disposition.

For years, we have struggled with citations that are often illegible and are missing critical information. This makes it difficult for our Records staff to accurately enter citation data into RMS. Currently, each citation has to be entered into RMS which takes upwards of two minutes per citation. In 2014, we wrote 10,530 citations.

The problem is further compounded when the Courts cannot make proper charging decisions and/or dispositions due to citations that are difficult to read and/or have missing information. There is no doubt that tickets are routinely dismissed due to these errors since it is not practical for the Courts to contact officers for further clarification.

Whenever we issue a citation, it should be complete and legible so that citizens understand why they were stopped, why they are being cited, and what actions they need to take to resolve the matter.

We also need to have accurate information so that we can do proper data analysis in order to determine high-accident locations and problem areas. We then have our officers focus on these problem areas.

Currently, we hand deliver citations to both Municipal and County Courts. Municipal citations are forwarded to the court usually within 24 to 48 hours (Monday thru Friday); County citations are hand-delivered on a weekly basis by our Detectives when they go to Court on another matter.

2) Project Goal(s), Objectives and Activities –

Goals – A broad statement about what the program expects to achieve. The goal is the description of the final anticipated outcome or result.
Objectives – Objectives are clear, realistic, specific and measurable. Objectives tell how a goal will be met.
Activities – Activities comprise the plan of operation for the project. In a detailed and concise way, the activities describe how each objective will be achieved.

Goals – The goal is to increase the percentage of citations utilizing standardized data entry and to have no missing critical data elements.

Objectives – The objective is to purchase an electronic ticketing system which will help improve the completeness, accuracy, and uniformity of citations written by our officers; eliminate the need for manual entry into RMS; and eliminate the need for citations to be hand-delivered to the courts.

Activities – If awarded, the Police Department will purchase ten handheld units that will be utilized by our Traffic Unit, Patrol Officers and our Parking Control Officer.

These units will be set up so that the officers will be required to complete all citations using standardized terminology (i.e. location, type of violation, etc.). All required fields will need to be completed before the citation can be issued.

The citation data will be uploaded into RMS before being electronically transferred to either the Municipal or County Court.

Non-identifying citation data will be made available to CDOT when requested.

If awarded, it will take approximately one month for City Council approval. Implementation will then take upwards of four months since three vendors are involved in this project.

3) Project Evaluation - *Describe the evaluation strategy that will be used to show project effectiveness and document successful activities. An evaluation plan should be designed so that an independent observer can confirm or measure whether or not the objectives have been met and progress was made toward the goal(s) by changing numbers, knowledge, attitudes, or behaviors. Performance measures (PM) should follow the format described in "Model PM for state traffic records systems" (specifically, page 11).*

The number of electronically issued citations having no missing critical data elements will be compared with the total number of electronic citations for 3 months after the project is fully operational. This percentage will be compared to the same ratio for manually written citations for a three month period before the project started.

During that same three month period, we will average and compare the number of days required for the transfer of data from the Police Department to the courts using the

electronic citation system with the number of days required for the transfer of manual citation information to the courts.

---

4) Agency Qualifications - *Describe the applicant agency's resources and skills to adequately manage the project. Briefly describe qualifications of staff or plans to train the staff who will work on the proposed project, including fiscal staff.*

The Police Department uses a team approach in how grants are administered and implemented. Deputy Chief Jeff Sanchez has administered a variety of state and federal grants; Commander Tim Englert oversees all technology projects in the Police Department; Elsa Walker is our Records Unit Supervisor; Glenda Bird is an I.T. Technical Support Specialist assigned to the Police Department; and Kathy Cassai is an Accountant with the city who is assigned to handle all Police Department grants.

---

5) Community Collaboration and Support - *All projects should demonstrate that partnerships exist or are being developed. Identify partnerships and planning groups that were included in the planning and implementation of this project. Those partnerships may include, but are not limited to, law enforcement, traffic engineering, health departments, social services agencies, schools, private businesses, churches, foundations and other community-based coalitions and organizations.*

The planning group for this project consists of representatives from the Police Department, Municipal Court and Information Technology to include the Deputy Police Chief, Support Services Commander, Traffic Unit Officers, Parking Control Officer, Records Unit Supervisor, Community Relations Specialist, Municipal Court Administrator and an Information Technology Specialist.

The outflow of this project will be the issuance of citations that are error-free and accurate thereby reducing citizen frustration and confusion; will eliminate the time needed to enter citations into RMS; will reduce the time needed for citation data to be transferred to each respective court; and will provide accurate data analysis in order to more effectively address high-accident and problem locations in the City of Englewood.

6) Long-Term Sustainability and Total Project Funding - *Describe the plan for reducing reliance on federal funding in the future. Describe the long-term plan for the programmatic development and ongoing financial support of the project. Is this project being funded using funds other than those provided from this grant? If yes, list the type and approximate amount of other funding that will be used to support this project. Has this project previously been funded by CDOT? If yes, list the years funded, approximate dollar amounts and progress to date in addressing the identified problem.*

The Englewood Police Department will maintain this project by appropriating the necessary funds to pay the yearly maintenance and support costs, as well as replacing equipment on an as-needed basis.

---

7) Budget Narrative - *Provide a justification and explanation of the budget items listed on the Detailed Budget Table. All budget figures should be justified and explained. Failure to justify and explain/show calculations could result in denial of funding.*

PERSONAL SERVICES: Explain how the salary and fringe benefit and overtime rates for each position were determined. ***NOTE:*** **Contract employees or independent contractors should be shown under Contractual Services, not Personal Services.**

Officer salaries will be computed at the level of a Police Officer I – $37.20/hour / $77,381.74/annually (2015).

OPERATING EXPENSES: Explain how the costs were determined and justify the need for the various line items. Items with a unit cost less than $5,000 are considered operating expenses and should be listed in this category. Items/equipment costing $5,000 or more should be listed under Capital Equipment (see below). All purchases should be made through competitive bid, state or local award, or established purchasing procedures.

Below is an itemized list of Operating Expenses:

- Motorola handheld units – 10 units x $1,450 = $14,500
- Motorola warranty – 10 x $250 = $2,500
- Motorola mag stripe reader – 9 x $125 = $ 1,125
- Motorola 4-slot Ethernet cradle kit – 3 x $425 = $1,275
- Motorola battery – 10 x $59 = $590
- Motorola battery charger kit – 3 x $180 = $540
- Zebra printer (ZQ520) – 9 x $660 = $5,940
- Zebra receipt paper – 2 x $95 = $190
- Zebra printer (ZQ510) – 1 x $525 = $525
- Zebra receipt paper – 1 x $75 = $75
- Zebra accessory adaptor -10 x $60 = $600

Total Operating Expenses = $27,860

CONTRACTUAL SERVICES: Explain why proposed consultant services cannot or should not be provided by project staff. Explain how the hourly rate or flat rate was determined. For each consulting organization, indicate the number of people to be assigned to the project, number of hours per person per day to be spent on the project, and a breakdown of the contract price by major cost item. Professional services should be procured competitively.

The vendor selected must perform the installation of this system.

Prior to submitting the short form request, the Police Department requested quotes from Brazos, who is a leader in the electronic ticketing industry, LogiSYS, who is our RMS vendor, and CSDC, who provides Judicial Enforcement Management System (JEMS) services for our Municipal Court.

Below is an itemized list of Contractual Services:

Brazos:

- Licenses 10 x $750 = $7,500
- Setup and Configuration = $9,000
- Standard Training Package = $3,500
- Parking Task = $1,500

LogiSYS (Interface):

- Interface to Brazos E-Citation = $12,500
- Services = $4,125

CSDC (Interface):

- Ticket Upload Interface = $9,500

Total Contractual Services = $47,625

TRAVEL: Explain the relationship of each cost item to the project, (e.g., if in-state training or conference travel expenses are requested, explain the topic of the conference and its relationship to the project). **Do not** include out-of-state travel costs – these costs must be requested and approved through a separate process that will be detailed if funds are awarded. Mileage should be listed as an Operating Expense.

None.

CAPITAL EQUIPMENT: Equipment is defined as an item that has a unit cost of **$5,000** or more and a useful life of one year or more. Explain why the proposed equipment is essential to conducting the project and is not currently available for use within your agency or organization. If the proposed equipment is to be shared with entities outside this project, the cost should be pro-rated based upon the percentage of use of the equipment by this project. All equipment must be purchased through competitive bid state or local award, or established purchasing procedures.

None.

MATCH: Match must equal 25% of federal funds requested or 20% the total project cost and can be reflected in a lump sum in one line item, or across multiple items or budget categories. The contributions can be in-kind services or direct cash support. Other sources of federal revenue may not be used as an agency match for highway safety projects.

The match will consist of personnel salaries during the implementation of the system, to include training, testing and initial use to determine functionality.

The total cost of the project is $94,356.25.

Our match is $18,871.25 which will be in the form of Officer salaries.

COLORADO
Department of Transportation
Transportation Systems
Management & Operations

DETAILED BUDGET

PERSONAL SERVICES

Name of Position	Annual Full-time Salary	Annual Fringe Benefit Cost	Total Annual Salary	% of time to this project	Total ($)	CDOT Share ($)	Local Match ($)
Police Officer I	77381.74		77381.74		18871.25		18871.25
SUBTOTAL							18871.25

(2) OVERTIME

Name	Overtime Rate ($)	No. of Hours	Total Cost ($)	CDOT Share ($)	Local Match ($)
SUBTOTAL					
TOTAL PERSONAL SERVICES			$	$	18871.25
				%	25%

OPERATING EXPENSES

Description	Number of Units	Cost per Unit ($)	Total Cost ($)	CDOT Share ($)	Local Match ($)
*See Narrative – table has insufficient room to include all items			Total Cost	CDOT Share	Local Match
TOTAL OPERATING EXPENSES			$27860	$27860	$
				100%	%

COLORADO
Department of Transportation
Transportation Systems
Management & Operations

CONTRACTUAL SERVICES

Contractor	Dates of Contract	Hourly Rate ($)	Total Cost ($)	CDOT Share ($)	Local Match ($)
Brazos			21500	21500	
LogiSYS			16625	16625	
CSDC			9500	9500	
			Total Cost	CDOT Share	Local Match
TOTAL CONTRACTUAL SERVICES			$47625	$47625	$
				100%	%

TRAVEL

Description	In State ($)	Total Cost ($)	CDOT Share ($)	Local Match ($)
		Total Cost	CDOT Share	Local Match
TOTAL TRAVEL		$	$	$
			%	%

CAPITAL EQUIPMENT

Description	No. of Units	Cost per Unit ($)	Total Cost ($)	CDOT Share ($)	Local Match ($)
			Total Cost	CDOT Share	Local Match
TOTAL CAPITAL EQUIPMENT			$	$	$
				%	%

COLORADO
Department of Transportation
Transportation Systems
Management & Operations

Budget Summary

	CDOT Share	Match
1. Total Personal Services:	$	$18871.25
2. Total Operating Expenses/Incentives:	$27860	$
3. Total Contractual Services:	$47625	$
4. Total Travel:	$	$
5. Total Capital Equipment:	$	$
6. Total lines1-5 (Amount Requested from CDOT):	$75485	
7. Total lines 1-5 (Amount provided by applicant):		$ 18871.25
Total Project Cost (Add lines 6 & 7):		**$94356.25**

COLORADO
Department of Transportation
Transportation Systems
Management & Operations

PART 3
Certifications and Assurances

It is hereby understood that this Application and the attachments hereto, when approved and signed by all concerned parties, as indicated shall constitute an agreement by and between the applicant organization to perform in accordance with the terms of this Application and attachments, taken as a whole. This agreement is based on CDOT procedures and Federal guidelines found in 49 CFR, Part 18 and 2 CFR, Part 225, in order to standardize and simplify federal grants. The signature below of an authorized representative of the applicant agency certifies and ensures that all the following conditions will be met.

1) Reports – The Contractor shall submit quarterly reports, a final report at the end of the project, and special reports, if any, as outlined in the Project Agreement. Please read Part 4, Reporting Requirements, following this section.
2) Copyrights, Publications, and Patents – Where activities supported by this project produce original copyright material, the Contractor may copyright such, but CDOT reserves nonexclusive and irrevocable license to reproduce, publish, and use such materials and to authorize others to do so. The Contractor may publish, at its own expense, the results of project activities without prior review by CDOT, provided that any publications (written, visual or sound) contain acknowledgment of the support provided by the National Highway Traffic Safety Administration (NHTSA) and CDOT. Any discovery or invention derived from work performed under this project shall be referred to CDOT, who will determine through NHTSA whether patent protections will be sought, how any rights will be administered, and other action required to protect the public interest.
3) Termination – This project agreement may be terminated or fund payments discontinued or reduced by CDOT at any time upon written notice to the Contractor due to non-availability of funds, failure of the Contractor to accomplish any of the terms herein, or from any change in the scope or timing of the project.
4) Fiscal Records – Contractor will maintain complete and detailed accounting records of all costs incurred on this project, including documentation of all purchases of supplies, equipment, and services; travel expenses; payrolls; and time records of any person employed part-time on this project. Federal, state or CDOT auditors shall have access to any records of the Contractor. These records shall be retained for three years after the final audit is completed or longer, if necessary, until all questions are resolved.
5) Funding – The Contractor will utilize funds provided to supplement and not to supplant state and local funds otherwise available for these purposes. Funds are to be expended only for purposes and activities approved in the project agreement. Reimbursement will be made periodically by CDOT based on approved requests for reimbursement. If matching funds are required, the Contractor will expend them from nonfederal sources, which must be spent no later than 30 days following the completion of the project.
6) Cost Principles and Grant Management – The eligibility of costs incurred and the management of this project shall be determined in accordance with 2 CFR, Part 225 and 49 CFR, Part 18 for state and local agencies, 2 CFR, Part 220 and 2 CFR, Part 215 for educational institutions, and 2 CFR, Part 230 for nonprofit entities.
7) Obligation Funds – Federal funds may not be obligated prior to the effective date or subsequent to the termination date of the project period. Requests for reimbursement outstanding at the termination date of the project must be made within 30 days or those funds may not be paid.

8) Changes – The Contractor must obtain prior written approval from CDOT for major project changes, including: changes of substance in project objectives, evaluation, activities, the project manager, key personnel, project budget or transfer of funds from one category in the budget to another. The period of performance of the project, however, cannot be changed.
9) Program Income – CDOT safety programs encourage Contractors to earn income to help defray program costs, but there are federal regulations that must be followed. Program income is defined as gross income received by the State and/or Contractor directly generated by a grant supported activity, or earned only as a result of the grant agreement during the grant period. Income earned by the Contractor with respect to the conduct of the project (sale of publications, registration fees, service charges, donations for child safety seats, etc.) must be accounted and income applied to project purposes, used to reduce project costs, or be used to meet cost agency matching requirements. The Contractor is responsible for reporting all program income according to federal and state requirements.
10) Purchases – Purchase of equipment or services must comply with state or local regulations. After the end of the project period, equipment should continue to be utilized for traffic safety purposes and cannot be disposed of without written approval of CDOT. The Contractor shall make and maintain an inventory of equipment to include descriptions, serial numbers, locations, costs or other identifying information, and submit a copy to CDOT.
11) Third Party Participants – No contracts or agreements may be entered into by the Contractor related to this project which are not incorporated into the project agreement and approved in advance by CDOT. The Contractor will retain ultimate control and responsibility for the project. CDOT shall be provided with a copy of all contracts and agreements entered into by Contractors. Any contract or agreement must allow for the greatest competition practicable and evidence of such competition or justification for a negotiated contract or agreement shall be provided to CDOT.
12) Participation by Disadvantaged Business Enterprises – The contractor agrees to take all necessary and reasonable steps in accordance with Title 49, CFR, Subtitle A, Part 26 to ensure that minority business enterprises have the maximum opportunity to compete for and perform contracts. Recipients and their contractors shall not discriminate on the basis of race, color, national origin, or sex in the award and performance of any subcontracts financed in whole or in part with federal funds.
13) Non Discrimination – In the performance of this agreement the Contractor, by its signature below, certifies and assures that it shall comply with all Federal statutes and implementing regulations relating to nondiscrimination. (These include but are not limited to: (a) Title VI of the Civil Rights Act of 1964 (P.L. 88-352) which prohibits discrimination on the basis of race, color or national origin (and 49 CFR Part 21); (b) Title IX of the Education Amendments of 1972, as amended (20 U.S.C. §§ 1681-1683, and 1685-1686), which prohibits discrimination on the basis of sex; (c) Section 504 of the Rehabilitation Act of 1973, as amended (29 U.S.C. §794) and the Americans with Disabilities Act of 1990 (42 USC § 12101, et seq.; PL 101-336), which prohibits discrimination on the basis of disabilities (and 49 CFR Part 27); (d) the Age Discrimination Act of 1975, as amended (42U.S.C. §§ 6101-6107), which prohibits discrimination on the basis of age; (e) the Drug Abuse Office and Treatment Act of 1972 (P.L. 92-255), as amended, relating to nondiscrimination on the basis of drug abuse; (f) the comprehensive Alcohol Abuse and Alcoholism Prevention, Treatment and Rehabilitation Act of 1970(P.L. 91-616), as amended, relating to nondiscrimination on the basis of alcohol abuse of alcoholism; (g) §§ 523 and 527 of the Public Health Service Act of 1912 (42 U.S.C. §§ 290 dd-3 and 290 ee-3), as amended, relating to confidentiality of alcohol and drug abuse patient records; (h) Title VIII of the Civil Rights Act of 1968 (42 U.S.C. §§ 3601 et seq.), as amended, relating to nondiscrimination in the sale, rental or financing of housing;

(i) any other nondiscrimination provisions in the specific statute(s) under which application for Federal assistance is being made; The Civil Rights Restoration Act of 1987, which provides that any portion of a state or local entity receiving federal funds will obligate all programs or activities of that entity to comply with these civil rights laws; and, (k) the requirements of any other nondiscrimination statute(s) which may apply to the application. The Contractor shall not discriminate on the basis of race, color, national origin, sex, religion, age, creed, Vietnam Era and Disabled Veterans status or sensory, mental or physical handicap in the provision of any terms and conditions of employment or the provision of service or benefits otherwise afforded and will take the affirmative action necessary to accomplish the objects of the above referenced laws.

14) Political Activities – In accordance with the provisions of the Hatch Act (5 U.S.C. §§1501-1508 and 7324-7328) no funds, materials, equipment, or services provided in this project agreement shall be used for any partisan political activity or to further the election or defeat of any candidate for public office or to pay any person to influence or attempt to influence an officer or employee of congress, or an employee of a member of congress, an officer or employee of congress in connection with the awarding of any federal loan or the entering in of any cooperative agreements.
15) Single Audit –All non-Federal entities that expend $500,000 or more of Federal awards in a year are required to obtain an annual audit in accordance with the Single Audit Act Amendments of 1996, OMB Circular A-133, the OMB Circular Compliance Supplement and Government Auditing Standards. A single audit is intended to provide a cost-effective audit for non-Federal entities in that one audit is conducted in lieu of multiple audits of individual programs. Nonfederal entities include States, Local Governments, and Non-Profit Organizations. The term non-profit organization includes non-profit institutions of higher education and hospitals.
16) Safety Belt Policy – No funds, materials, property, or services will be provided to any political subdivision that does not have a current and actively enforced policy requiring the use of seat belts.
17) Drug Free Workplace – In accordance with the Anti-Drug Act of 1988 (41 USC 702-707) and Drug-Free Workplace (42 USC 12644), CDOT has the responsibility to ensure that unlawful manufacture, distribution, dispensing, possession or use of a controlled substance by any employees, grantees, and/or sub-grantee of the Contractor and/or any such activity is prohibited in the Contractor's workplace.
18) Colorado Standard Field Sobriety Testing – All law enforcement officers who are performing impaired driving enforcement activities with funding from CDOT must be in compliance with the current Colorado Standards for Field Sobriety Testing Standards.
19) Debarment and Suspension - The applicant certifies, by signature below, that neither it nor its principals are presently debarred, suspended, proposed for debarment, declared ineligible, or voluntarily excluded from participation in this transaction by any federal department or agency.
20) Restriction on State Lobbying - None of the funds under this program shall be used for any activity specifically designed to urge or influence a state or local legislator to favor or oppose the adoption of any specific legislative proposal pending before any state or local legislative body. Such activities include both direct and indirect e.g., "grassroots" lobbying activities, with one exception. This does not preclude a State official whose salary is supported with NHTSA funds from engaging in direct communications with state or local legislative officials, in accordance with customary state practice, even if such communications urge legislative officials to favor or oppose the adoption of a specific pending legislative proposal.
21) Certification Regarding Federal Lobbying - The undersigned certifies, to the best of his or her knowledge and belief, that:

1. No Federal appropriated funds have been paid or will be paid, by or on behalf of the undersigned, to any person for influencing or attempting to influence an officer or employee of any agency, a Member of Congress, an officer or employee of Congress, or an employee of a Member of Congress in connection with the awarding of any Federal contract, the making of any Federal grant, the making of any Federal loan, the entering into of any cooperative agreement, and the extension, continuation, renewal, amendment, or modification of any Federal contract, grant, loan, or cooperative agreement.
2. If any funds other than Federal appropriated funds have been paid or will be paid to any person for influencing or attempting to influence an officer or employee of any agency, a Member of Congress, an officer or employee of Congress, or an employee of a Member of Congress in connection with this Federal contract, grant, loan, or cooperative agreement, the undersigned shall complete and submit Standard Form-LLL, "Disclosure Form to Report Lobbying," in accordance with its instructions.
3. The undersigned shall require that the language of this certification be included in the award documents for all sub-award at all tiers (including subcontracts, sub-grants, and contracts under grant, loans, and cooperative agreements) and that all sub-recipients shall certify and disclose accordingly.
This certification is a material representation of fact upon which reliance was placed when this transaction was made or entered into. Submission of this certification is a prerequisite for making or entering into this transaction imposed by section 1352, title 31, U.S. Code. Any person who fails to file the required certification shall be subject to a civil penalty of not less than $10,000 and not more than $100,000 for each such failure.

22) Federal Funding Accountability and Transparency Act – The State is required to report for each sub-grant awarded as shown below. Contractor agrees to provide the information below upon request for reporting purposes.

- Name of the entity receiving the award;
- Amount of the award;
- Information on the award including transaction type, funding agency, the North American Industry Classification System code or Catalog of Federal Domestic Assistance number (where applicable), program source;
- Location of the entity receiving the award and the primary location of performance under the award, including the city, State, congressional district, and country; , and an award title descriptive of the purpose of each funding action;
- A unique identifier (DUNS);
- The names and total compensation of the five most highly compensated officers of the entity if-- of the entity receiving the award and of the parent entity of the recipient, should the entity be owned by another entity;

(i) the entity in the preceding fiscal year received—
(I) 80 percent or more of its annual gross revenues in Federal awards; and
(II) $25,000,000 or more in annual gross revenues from Federal awards; and
(ii) the public does not have access to information about the compensation of the senior executives of the entity through periodic reports filed under section 13(a) or 15(d) of the Securities Exchange Act of 1934 (15 U.S.C. 78m(a), 78o(d)) or section 6104 of the Internal Revenue Code of 1986;

COLORADO
Department of Transportation
Transportation Systems
Management & Operations

PART 4
Reporting Requirements

Reporting Frequency: The Office of Transportation Safety requires four types of reports in conjunction with highway safety projects:

1. Quarterly reports during the life of a project;
2. A final report at the conclusion of a project. This is to include training and consultant reports, if applicable;
3. Special reports as required; and
4. Annual Report Template (to be provided by CDOT)

These reports keep CDOT informed of a project's progress, explain any difficulties encountered, provide a background of information that can be passed on to others, suggest ways in which CDOT can assist with the project and aid in distribution of state funds.

Quarterly Reports: These are to be submitted quarterly and are due within twenty (20) calendar days after the end of the reporting calendar quarter as follows:

First Quarter:	1 October – 31 December	Report due January 20
Second Quarter:	1 January – 31 March	Report due April 20
Third Quarter:	1 April – 30 June	Report due July 20
Fourth Quarter:	1 July – 30 September	Report due October 20

If there is no activity during the reporting period, submit a report indicating so. Any original or innovative ideas or methods employed in your project should be incorporated into your reports.

Fourth and Final Report: Final report to be submitted within 45 days of contract completion, which is no later than November 15.

Final reports are to be detailed and must describe whether the project objectives were accomplished, if technical and fiscal problems were encountered, and what improvements in traffic safety have resulted or probably will result. Included in final reports will be copies of publications, training reports and any statistical data generated in project execution. These final reports should discuss the following:

1. Accomplishments compared to the original project objectives;
2. Were all activities of the project completed as scheduled? Include dates and milestones when studies were completed; equipment acquired, installed and operated;
3. Any unanticipated proceedings that affected the project;
4. Funding and costs for completion of the project in relationship to original estimates; and
5. Third party performance if applicable. A copy of any consultant reports should be included with the final report.

Special Reporting: Special reporting procedures may be required, including performance measures. If so, reporting frequency will be detailed in the project agreement.

Annual Report Template: An Annual Report template will be provided to the contractor in late October. The contractor is responsible for providing the requested information and submitting back to CDOT. The templates are then used to form the basis of the Office of Transportation Safety and Traffic Engineering Branch's Annual Report.

PART 5
Reimbursement Requirements

CDOT funds grants on a "cost reimbursement" basis only. CDOT will not make payments in advance or in anticipation of goods or services.

Claims for reimbursement will be submitted to the OTS on a monthly basis if there are any costs incurred.

Final claims for reimbursement **must be received by CDOT no later than November 15 (for costs incurred through the final contract month of September).**

Claims for reimbursement received after the above cutoff date will not be reimbursed.

Unallowable Project Costs: All projects must follow appropriate state and federal funding regulations. Examples of unallowable project costs include, but are not limited to, the following:

- Projects not dealing with traffic records improvements;
- Routine roadway construction or maintenance;
- Office furniture and fixtures and
- Funds that supplant existing budgets*

* Federal regulations prohibit supplanting of funds. Examples of supplanting include: replacing routine and/or existing State or local expenditures with the use of Federal grant funds and/or using Federal grant funds for cost of activities that constitute general expenses required to carry out the overall responsibilities of state, local or federally recognized Indian tribal government.

COLORADO
Department of Transportation
Transportation Systems
Management & Operations

PART 6
Signature Requirements

I declare under penalty of perjury in the second degree, and any of the applicable state or federal laws, that the statements made and contained under the title Certification and Assurances above are true and complete to the best of my knowledge.

I have read and understand the above Reporting and Reimbursement requirements and will comply with these requirements made and contained herein on pages 10 and 11 to the best of my knowledge.

Applicant agency/organization Authorizing Official (person with contracting authority):

Jeffery L. Sanchez — *Name*

Deputy Police Chief — *Title*

Address (if different than above)

email

telephone

9/28/15

Signature of Authorized Official

Date

The agency personnel contact information below must be completed

1. CONTRACT/PROJECT DIRECTOR	3. PROJECT COORDINATOR
Name: Jeffery L. Sanchez	Name: Jeffery L. Sanchez
Address: Englewoo[illegible]	Address: Englewood, CO 80110
Telephone:	Telephone:
e-mail:	e-mail:
2. ACCOUNTING RECORDS/CLAIMS	**4. MAIL PROJECT PAYMENTS TO:**
Name: Kathy Cassai	Name: Kathy Cassai
Address: Englewood, CO 80110	Address: Englewood, CO 80110
Telephone:	Telephone:
e-mail:	e-mail:

EXHIBIT B

Colorado Dept of Transportation

Denver, Co 80222

Buyer: [redacted] Waldmann
Phone Number:
Agency Contact: Alisa Babler
Phone Number:

DATE: 11/17/2015

IMPORTANT
The PO# and Line# must appear on all invoices, packing slips, cartons and correspondence

Purchase Order
State of Colorado

PO# 411007655 **Page#** 1 of 1
Award#:
BID#:

Vendor Master#: 2000021
Phone:
Vendor Contact:

VENDOR
CITY OF ENGLEWOOD
1000 ENGLEWOOD PARKWAY
ENGLEWOOD CO 80110

Invoice
TO: COLO DEPT OF TRANSPORTATION
4201 E ARKANSAS AVE ROOM 330
Denver CO 80222

Payment will be made by this agency

Ship
TO: Colorado Dept of Transportation
4201 E. Arkansas Ave
Denver CO 80222

Delivery/Installation Date: 09/30/2016

INSTRUCTIONS TO VENDOR

1. If for any reason, delivery of this order is delayed beyond the delivery/Installation date shown, please notify the agency contact named at the top left (Right of cancellation is reserved in instances in which timely delivery is not made). 2. All chemicals, equipment and materials must conform to the standards required by OSHA. 3. NOTE: Additional terms and conditions on reverse side or at address shown in Special Instructions.

SPECIAL INSTRUCTIONS

LINE	PRODUCT NUMBER / PRODUCT CATEGORY / DESCRIPTION	UOM / PLANT	QUANTITY	UNIT COST	TOTAL ITEM COST
00001	92500 Englewood PD E-Citation 4111	AU 7001	75,485	1.00	75,485.00

I agree to comply with the statements made and contained under the title Certification and Assurances in the Office of Transportation Safety and Traffic Engineering approved application.
I have read and understand the Reporting and Reimbursement requirements andwill comply with these requirements made and contained on pages 10 and 11, of said application, to the best of my knowledge.

DOCUMENT TOTAL: 75,485.00

THIS PO IS ISSUED IN ACCORDANCE WITH STATE AND FEDERAL REGULATIONS
https://www.codot.gov/business/procurement-and-contract-services/purchase-order-terms-and-conditions/purchase-order-terms-and-conditions/view

DP-01 (R-02/06)

FOR THE STATE OF COLORADO

Authorized Signature Date

Signature not required if PO transmitted electronically.

COUNCIL COMMUNICATION

Meeting Date:	Agenda Item:	Subject:
December 7, 2015	11ai	Valley Sanitation District Supplement #24

Initiated By:	Staff Source:
Englewood Water & Sewer Board	Tom Brennan, Director of Utilities

PREVIOUS COUNCIL ACTION

None.

RECOMMENDED ACTION

The Water & Sewer Board, at their October 13, 2015 meeting, recommend Council approval, by ordinance, of a bill for an ordinance approving Valley Sanitation District Supplement #24.

BACKGROUND, ANALYSIS, AND ALTERNATIVES IDENTIFIED

The City of Englewood provides sewage treatment outside the City through contracts with numerous connector districts. The area is defined by the natural drainage and extends south and east from Broadway to I-25 and from Hampden to Lincoln Ave., excluding Highlands Ranch. By contract, the City of Englewood must approve any additions of land to be served by the districts. These are usually in-fill situations that are within the area it has committed to serve. Adequate capacity has been provided in the treatment plant to accommodate all such future inclusions.

A request was made by Global Storage, LLC for inclusion into the Valley Sanitation District. Valley Supplement #24 is for an area approximately 4.4 acres. The property currently has a residence on septic that will be rezoned to commercial, and will be tapped into the Englewood sewer system.

The legal is attached as Exhibit A. The property is located near W. Union Ave. and S. Decatur St. at 2690 W. Union Ave.

FINANCIAL IMPACT

None.

LIST OF ATTACHMENTS

Bill for Ordinance
Valley Sanitation District. Supplement #24

WATER & SEWER BOARD
MINUTES

OCTOBER 13, 2015

Present: Wiggins, Penn, Oakley, Burns, Moore, Lay, Habenicht, Gillit, Olson

Absent:

Also present: Tom Brennan, Director of Utilities
John Bock, Manager of Administration

The meeting was called to order at 5:01 p.m.

1. MINUTES OF THE SEPTEMBER 9, 2015 MEETING & PHONE VOTE.

The Board received the Minutes of the September 9, 2015 Water & Sewer Board Meeting and phone vote of September 16, 2015.

2. GUEST: KELLY PICKET – 3 CARRIAGE BROOK RD. – CHERRY HILLS VILLAGE.

Ms. Kelly Picket appeared before the Board to request relief on an upgrade tap fee for a water line tap at 3 Carriage Brook Road. An engineers' report was included that a larger tap size is needed because the service line is 580 feet.

Motion: To grant the request from Ms. Picket to waive the upgrade tap fee for the water line tap at 3 Carriage Brook Road.

Moved: Seconded:

Motion carried unanimously.

3. TEST DRIVE A METER PROGRAM.

The Board received a Memo from John Bock, Utilities Manager discussing the situation where, after a year of being on the program, a customer does not respond to notices to either transfer to metered or grant us access to retrieve the meter.

4. BOARD & COMMISSION APPOINTMENT PROCESS.

The Board received a memo from Eric Keck, City Manager, regarding the boards and commission appointment process when an alternate is being recommended to fill the seat of a person who has resigned.

5. VALLEY SANITATION DISTRICT SUPPLEMENT #24.

A request was made by Global Storage for inclusion into the Valley Sanitation District. Valley Supplement #24 is for an area approximately 4.4 acres. The property currently has a residence on septic that will be rezoned to commercial, and will be tapped into the Englewood sewer system. The property is located at 2690 W. Union Ave.

Motion: To recommend Council approval of Valley Sanitation District Supplement #24 for 2690 W. Union Ave.

Moved: Seconded:

Motion approved unanimously.

6. PUBLIC ACCESS TO McLELLAN RESERVOIR.

A request for public access to McLellan Reservoir was received. Englewood has historically restricted public access to McLellan Reservoir. As a surface water source, it is vulnerable to contamination with direct human exposure. Preventing additional pollution from occurring in a water source by restricting public access reduces the amount of contaminants that have to be removed from the water.

Considerations for opening McLellan Reservoir for public use include park management, trash collection, liability and maintenance, all of which are expensive issues. There are no restrooms, paved roads or parking facilities currently in place. Existing fish and wildlife ecosystems would be greatly impacted. Adjacent neighbors have indicated that opening the reservoir could meet with strong resistence.

Motion: To recommend to Council to establish an Administrative Policy restricting public access to the McLellan Reservoir.

Motion: Seconded:

Motion passed unanimously.

The meeting adjourned at

The next meeting will be held Tuesday, November 10, 2015 at 5:00 p.m. in the Community Development conference Room.

Respectfully submitted,

Cathy Burrage
Recording Secretary

WATER & SEWER BOARD
MINUTES

NOVEMBER 10, 2015

Present: Wiggins, Penn, Burns, Moore, Lay, Habenicht, Olson, Oakley

Absent: Gillit

Also present: Tom Brennan, Director of Utilities
John Bock, Manager of Administration

The meeting was called to order at 5:02

1) MINUTES OF THE OCTOBER 13, 2015 MEETING.

The Board received the Minutes of the October 13, 2015 Water & Sewer Board Meeting.

Motion: To approve the Minutes of the October 13, 2015 meeting.

Moved: Burns Seconded: Habenicht

Motion approved unanimously.

2. GUEST: JOHN CHRISTIAN – 4557 S. LOGAN ST. – SEWER REFUND.

It was discovered during a sewer back-up that the house at 4557 S. Logan St., owned by Mr. John Christian, was on a septic system. It was never connected to the City's sewer system, but being billed for sewer service. John Bock, Manager of Administration, refunded the amount Mr. Christian paid back to the Statute of Limitations date. The amount refunded was $1,474.44. Mr. Christian appeared before the Board to request a refund on his sewer bill beyond the Statute of Limitations, back to when he purchased the property on September 18, 1998 to cover expenses related to the back-up. The additional refund would be $845.61.

BY AUTHORITY

ORDINANCE NO. ____
SERIES OF 2015

COUNCIL BILL NO. 61
INTRODUCED BY COUNCIL
MEMBER _____

A BILL FOR

AN ORDINANCE APPROVING SUPPLEMENT NO. 24 TO THE VALLEY SANITATION DISTRICT CONNECTOR'S AGREEMENT WITH THE CITY OF ENGLEWOOD TO INCLUDE ADDITIONAL LAND WITHIN THE DISTRICT BOUNDARIES.

WHEREAS, the Valley Sanitation receives sewage treatment in accordance with a contract with the City of Englewood; and

WHEREAS, Valley Sanitation District has submitted a request for inclusion into Valley Sanitation District of a parcel located near West Union and South Decatur Street – 2690 West Union Avenue, Englewood with the proposed use Commercial; and

WHEREAS, Supplement No. 24 is for approximately 4.4 acres which and currently has a residence on septic that will be rezoned to commercial, and will be tapped into the Valley Sanitation District; and

WHEREAS, said annexation of this additional parcel of land will not increase the tap allocation to the Valley Sanitation District; and

WHEREAS it is necessary for said District to amend its contract with the City of Englewood to include this additional land within the District; and

WHEREAS, the Englewood Water and Sewer Board reviewed and recommended approval of the Valley Sanitation Supplement No. 24 to Connector's Agreement at their October 13, 2015 meeting;

NOW, THEREFORE, BE IT ORDAINED BY THE CITY COUNCIL OF THE CITY OF ENGLEWOOD, COLORADO, THAT:

Section 1. The Agreement between the City of Englewood and Valley Sanitation District entitled "Supplement No. 24 to Connector's Agreement" is hereby approved.
A copy of said Agreement is attached hereto as Exhibit A.

Section 2. The Mayor and City Clerk are hereby authorized to sign and attest, respectively, the said Agreement for and on behalf of the City Council and the City of Englewood.

Introduced, read in full, and passed on first reading on the 7th day of December, 2015.

Published by Title as a Bill for an Ordinance in the City's official newspaper on the 10th day of December, 2015.

Published as a Bill for an Ordinance on the City's official website beginning on the 9th day of December, 2015 for thirty (30) days.

_____
Joe Jefferson, Mayor

ATTEST:

_____
Loucrishia A. Ellis, City Clerk

I, Loucrishia A. Ellis, City Clerk of the City of Englewood, Colorado, hereby certify that the above and foregoing is a true copy of a Bill for an Ordinance, introduced, read in full, and passed on first reading on the 7th day of December, 2015.

_____
Loucrishia A. Ellis

EXHIBIT A

SUPPLEMENT NO. 24 TO CONNECTOR'S AGREEMENT

THIS AGREEMENT, made and entered into by and between the **CITY OF ENGLEWOOD**, acting by an through its duly authorized Mayor and City Clerk, hereinafter called the **"City,"** and **VALLEY SANITATION DISTRICT**, Arapahoe and Douglas Counties, Colorado, hereinafter called the **"District,"**

WITNESSETH:

WHEREAS, on the 18th day of April, 1955 the City and the District entered into an Agreement in which the City agreed to treat sewage originating from the District's sanitary sewer system within the area served by the District, which Agreement was renewed by Connector's Agreement dated, April 15, 2013.

WHEREAS, said Connector's Agreement provides that the District may not enlarge its service area without the written consent of the City;

NOW, THEREFORE, in consideration of the mutual covenants and undertakings herein set forth, the parties agree as follows:

1. The City hereby consents to the inclusion of certain additional area located in Arapahoe County, Colorado, owned by Global Storage, LLC and more fully described on Exhibit A attached hereto and incorporated herein by reference, into Valley Sanitation District. The City agrees that said additional area may be served with the sewer facilities of the District, and that the City will treat the sewage discharged into the City's trunk line from said additional area, all in accordance with the Connector's Agreement dated, April 18, 1955 and Amended April 15, 2013. Accordingly, Exhibit A referred to in Paragraph 1 of the Connector's Agreement dated April 18, 1955 and Amended April 15, 2013, is hereby amended to include such additional area.

2. Each and every other provision of the said Connector's Agreement dated April 18, 1955 and Amended April 15, 2013, shall remain unchanged.

IN WITNESS WHEREOF, the parties have set their hands and seals this _____ day of _____, 20____.

CITY OF ENGLEWOOD

BY: _____
MAYOR

ATTEST:

_____
CITY CLERK
(SEAL)

VALLEY SANITATION DISTRICT,
ARAPAHOE COUNTY, COLORADO

BY

ATTEST:

SECRETARY
(SEAL)

2690 W. Union Avenue

EXHIBIT A

LEGAL DESCRIPTION

THE LAND REFERRED TO IN THIS POLICY IS DESCRIBED AS FOLLOWS:

Parcel A:

A tract of land in the NE ¼ of the SE ¼ of Section 8, Township 5 South, Range 68 West of the 6th P.M., described as follows:

Beginning at a point on the West line, 291.6 feet South of the Northwest corner of the NE ¼ of the SE ¼ of Section 8, Township 5 South, Range 68 West;
Thence East 404 feet;
Thence South 320 feet;
Thence West 404 feet to the West line of said NE ¼ of the SE ¼;
Thence North along the West line 320 feet to the point of beginning,
County of Arapahoe, State of Colorado.

Parcel B:

A tract of land located in the NE ¼ SE ¼ of Section 8, Township 5 South, Range 68 West of the 6th P.M., described as follows:

Commencing at a point on the North line of the NE ¼ SE ¼ of said Section 8, which is 194 feet East of the Northwest corner of the said NE ¼ of the SE ¼ of Section 8;
Thence Southerly 291.7 feet to a point which is 198 feet East of the West line of the Northeast ¼ of the Southeast ¼ of Section 8;
Thence East 206 feet;
Thence North 291.8 feet to the North line of the NE ¼ of the SE ¼ of Section 8;
Thence West along the North line 210 feet to the place of Beginning, EXCEPT part conveyed to City of Englewood by Deed recorded Aril 16, 1965 in Book 1589 at page 250,
County of Arapahoe, State of Colorado.

Copyright American Land Title Association. All rights reserved. The use of this Form is restricted to ALTA licensees and ALTA members in good standing as of the date of use. All other uses are prohibited. Reprinted under license from the American Land Title Association.

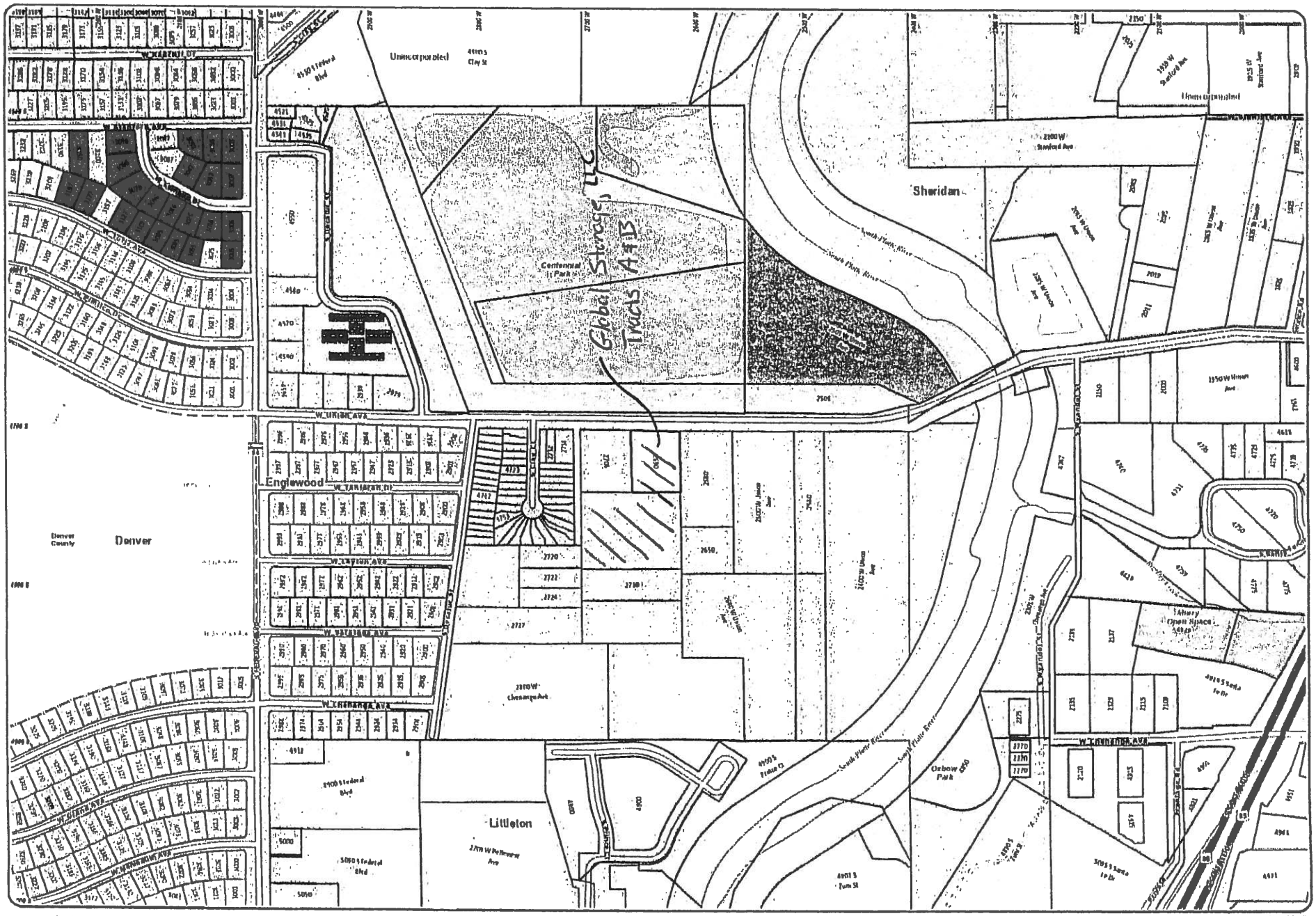

2077-08-4-00-021

0 0.0225 0.045 0.09 0.135 0.18

Map generated On 6/22/2015

Generated by Arapahoe County's ArapaMAP

COUNCIL COMMUNICATION

Meeting Date:	Agenda Item:	Subject:
7 December 2015	11 aii	Smoking Prohibition
Initiated By:	**Staff Source:**	
City Manager's Office	Eric A. Keck, City Manager	

PREVIOUS COUNCIL ACTION

The City Council has previously conducted a study session on 26 Oktober 2015 concerning the prohibition of smoking adjacent to publicly owned facilities and parks. The proposed smoking ban was initially raised by former Councilperson Jill Wilson earlier in 2015. On 2 November 2015, the initial ordinance prohibiting smoking in public places was brought forward.

RECOMMENDED ACTION

Staff is recommending that the City Council table this proposed ordinance so that further study and refinement of the language concerning a prohibition of smoking adjacent to public facilities and venues can occur.

BACKGROUND, ANALYSIS, AND ALTERNATIVES IDENTIFIED

The City Council Study Session conducted on 26 Oktober 2015 brought forward many concerns from Council members concerning smoking adjacent to public facilities as well as smoking within City parks wherein athletic and other active recreation activities occur. At that meeting, the Council enunciated a desire to see an ordinance brought forward which prohibited smoking adjacent to public facilities and within the City's parks. Furthermore, staff was encouraged to designate areas within all of our public properties where smoking would be permissible.

While a broader prohibition of public smoking altogether was raised at this meeting, the Council determined that a much narrower focus of prohibiting smoking in public buildings and parks was more appropriate.

FINANCIAL IMPACT

There was no direct financial impact identified with this proposed ordinance.

LIST OF ATTACHMENTS

BY AUTHORITY

ORDINANCE NO. ____
SERIES OF 2015

COUNCIL BILL NO. 58
INTRODUCED BY COUNCIL
MEMBER WILSON

AN ORDINANCE AMENDING TITLE 6, CHAPTER 1, SECTION 8, OF THE ENGLEWOOD MUNICIPAL CODE 2000 ADOPTING SMOKING PROHIBITIONS, STATE STANDARDS, FURTHER DEFINING PUBLIC BUILDINGS AND UNIFYING THE DEFINITION OF TOBACCO THROUGHOUT THE CODE.

WHEREAS, Colorado Revised Statutes §25-14-207 permits a city to enact, adopt, and enforce smoking regulations that cover the same subject matter as certain provisions of the Colorado Clear Indoor Air Act; and

WHEREAS, no local authority may adopt any local regulation of smoking that is less stringent than the provisions of part 2 of the Act; except that a local authority may specify a radius of less than fifteen feet for the area included within an entryway; and

WHEREAS, the municipal courts or their equivalent in any city, city and county, or town have jurisdiction over violations of smoking regulations enacted by a city; and

WHEREAS, the City Council of the City of Englewood, Colorado finds that further restricting public areas where smoking is prohibited protects the public health safety and welfare of the citizens of Englewood; and

WHEREAS, the City Council finds that it is in the best interest of the City of Englewood to protect non-smokers from involuntary exposure to smoke; and

WHEREAS, the City Council finds that the purpose of these regulations promote the public health, safety, and welfare of the citizens of Englewood.

NOW, THEREFORE, BE IT ORDAINED BY THE CITY COUNCIL OF THE CITY OF ENGLEWOOD, COLORADO, AS FOLLOWS:

Section 1. The City Council of the City of Englewood, Colorado hereby authorizes amending Title 6, Chapter 1, Section 8, of the Englewood Municipal Code 2000 to read as follows:

6-1-8: SMOKING RESTRICTIONS.

A. Definitions.

The definitions set forth in C.R.S. §25-14-203 shall apply unless the context otherwise requires or such terms are more specifically set forth in the Englewood Municipal Code.

B. Public Building is further defined to include the property surrounding such building, including but not limited to parking lots.

C. General Smoking Restrictions:

Except as provided in Section 6-1-8(D) of this Chapter, and in order to reduce the levels of exposure to environmental tobacco and marijuana smoke, smoking shall not be permitted and no person shall smoke:

1. In any indoor area, including, but not limited to:

   a. Public meeting places.

   b. Elevators.

   c. Government owned or operated means of mass transportation, including, but not limited to, buses, vans, and trains.

   d. Taxicabs and limousines.

   e. Grocery stores.

   f. Gymnasiums.

   g. Jury waiting and deliberation rooms.

   h. Courtrooms.

   i. Child daycare facilities.

   j. Healthcare facilities including hospitals, healthcare clinics, doctor's offices, and other health care related facilities.

   k. Any place of employment that is not exempted. In the case of employers who own facilities otherwise exempted from this Chapter, each such employer shall provide a smoke free work area for each employee requesting not to have to breathe environmental tobacco smoke. Every employee shall have a right to work in an area free of environmental tobacco smoke.

   l. Food service establishments.

   m. Bars.

   n. Limited gaming facilities and any other facilities in which any gaming or gambling activity is conducted.

   o. Indoor sports arenas.

   p. Restrooms, lobbies, hallways, and other common areas in public and private buildings, condominiums, and other multiple-unit residential facilities.

q. Restrooms, lobbies, hallways, and other common areas in hotels and motels, and in at least seventy-five percent (75%) of the sleeping quarters within a hotel or motel that are rented to guests.

r. Bowling alleys.

s. Billiard or pool halls.

t. Facilities in which games of chance are conducted.

u. The common areas of retirement facilities, publicly owned housing facilities, and nursing homes, but not including any resident's private residential quarters or areas of assisted living facilities.

v. Public buildings including the property and parking lots surrounding such a property.

w. Auditoria.

x. Theaters.

y. Museums.

z. Libraries.

i. Public and nonpublic schools.

ii. Other educational and vocational institutions.

iii. The entryways of all buildings and facilities listed in above Subsections i and ii.

D. Exceptions to Smoking Restrictions.

This Chapter shall not apply to:

1. Private homes, private residences, and private automobiles; except that this Chapter shall apply if any such home, residence, or vehicle is being used for childcare of day care or if a private vehicle is being used for the public transportation of children or as part of healthcare or daycare transportation:

2. Limousines under private hire.

3. A hotel or motel room rented to one or more guests if the total percentage of such hotel or motel rooms in such hotel or motel does not exceed twenty-five percent (25%).

4. Any retail tobacco business.

5. The Privately-Owned outdoor area of any business, except that the entryways of businesses located in a building or facility listed in Section 6-1-8(C)(2) and outdoor areas referenced in Section 6-1-8(C)(1) shall be subject to the provisions of this Chapter.

6. A place of employment that is not open to the public and that is under the control of an employer that employs three (3) or fewer employees.

7. A private, nonresidential building on a farm or ranch, as defined in Section 39-1-102 Colorado Revised Statutes that has annual gross income of less than five hundred thousand dollars ($500,000.00).

8. The areas of assisted living facilities that are designated for smoking for residents, are fully enclosed and ventilated and to which access is restricted to the residents or their guests. As used in this Subsection (H), "assisted living facility" means a nursing facility, as that term is defined in Section 25.5-4-103 of the Colorado Revised Statutes, and an assisted living residence, as that term is defined in Section 25-27-102 of the Colorado Revised Statutes.

9. Smoking in vehicles so long as the windows, roof, and doors are closed and sealed.

10. Smoking areas designated by the Englewood City Manager.

Section 2. Uniform definition of Tobacco. The following definition of tobacco shall apply to E.M.C. 6-1-8, and, E.M.C. 7-6E-8

Tobacco: Cigarettes, cigars, cheroots, stogies, and periques; granulated, plug cut, crimp cut, ready rubbed, and other smoking tobacco; snuff and snuff flour; cavendish; plug and twist tobacco; fine cut and other chewing tobacco; shorts, refuse scraps, clippings, cuttings, and sweepings of tobacco; and other kinds and forms of tobacco, prepared in such manner as to be suitable for chewing or for smoking in a cigarette, pipe, electronic smoking device, or otherwise, or both for chewing and smoking. "Tobacco" also includes cloves and any other plant matter or product that is packaged for smoking

Section 3. Safety Clauses. The City Council hereby finds, determines, and declares that this Ordinance is promulgated under the general police power of the City of Englewood, that it is promulgated for the health, safety, and welfare of the public, and that this Ordinance is necessary for the preservation of health and safety and for the protection of public convenience and welfare. The City Council further determines that the Ordinance bears a rational relation to the proper legislative object sought to be obtained.

Section 4. Severability. If any clause, sentence, paragraph, or part of this Ordinance or the application thereof to any person or circumstances shall for any reason be adjudged by a court of competent jurisdiction invalid, such judgment shall not affect, impair or invalidate the remainder of this Ordinance or it application to other persons or circumstances.

Section 5. Inconsistent Ordinances. All other Ordinances or portions thereof inconsistent or conflicting with this Ordinance or any portion hereof are hereby repealed to the extent of such inconsistency or conflict.

Section 6. Effect of repeal or modification. The repeal or modification of any provision of the Code of the City of Englewood by this Ordinance shall not release, extinguish, alter, modify, or change in whole or in part any penalty, forfeiture, or liability, either civil or criminal, which shall have been incurred under such provision, and each provision shall be treated and held as still remaining in force for the purposes of sustaining any and all proper actions, suits, proceedings, and prosecutions for the enforcement of the penalty, forfeiture, or liability, as well

as for the purpose of sustaining any judgment, decree, or order which can or may be rendered, entered, or made in such actions, suits, proceedings, or prosecutions.

Section 7. Penalty. The Penalty Provision of Section 1-4-1 EMC shall apply to each and every violation of this Ordinance.

Introduced, read in full, and passed on first reading on the 2nd day of November, 2015.

Published by Title as a Bill for an Ordinance in the City's official newspaper on the 5th day of November, 2015.

Published as a Bill for an Ordinance on the City's official website beginning on the 4th day of November, 2015 for thirty (30) days.

Brought forward on the 16th day of November, 2015 and continued until December 7, 2015, for further review and discussion.

Read by title and tabled on final reading for the purpose of amending the proposed Ordinance on the 7th day of December, 2015.

_____
Joe Jefferson, Mayor

ATTEST:

_____
Loucrishia A. Ellis, City Clerk

I, Loucrishia A. Ellis, City Clerk of the City of Englewood, Colorado, hereby certify that the above and foregoing is a true copy of the Ordinance title and tabled on final reading on the 7th day of December, 2015.

_____
Loucrishia A. Ellis

COUNCIL COMMUNICATION

Date	Agenda Item	Subject
December 7, 2015	11bi	Ordinance to approve the extension of a moratorium on new marijuana consumption establishments – 2nd Reading
INITIATED BY Community Development Department	**STAFF SOURCE** Michael Flaherty, Interim Director, Community Development Department	

PREVIOUS COUNCIL ACTION

Ordinance 28, Series of 2015, created a moratorium on the establishment of new marijuana consumption establishments.

BACKGROUND

City staff has worked with the affected departments and the Englewood Liquor and Marijuana Authority to evaluate information and potential impacts of marijuana consumption establishments. The Authority has created an Ad hoc committee to study the issue. While the committee has made progress, they have not yet formulated final recommendations to forward to City Council. Until Council has had the opportunity to review recommendations and establish regulations for potential future marijuana consumption establishments, the Community Development Department, through the Planning and Zoning Commission, cannot establish zoning regulations for the placement of potential new marijuana consumption establishments in the community.

RECOMMENDED ACTION

The Community Development Department recommends that City Council approve, on second reading, the extension of the moratorium by six months to allow the Ad hoc committee of the Englewood Liquor and Marijuana Licensing Authority to complete their review and forward recommendations to City Council, and for City Council to act on the recommendations of the Authority.

FINANCIAL IMPACT

There is no financial impact through the extension of the moratorium.

LIST OF ATTACHMENTS

Proposed bill for an ordinance

BY AUTHORITY

ORDINANCE NO. ____
SERIES OF 2015

COUNCIL BILL NO. 59
INTRODUCED BY COUNCIL MEMBER GILLIT

AN ORDINANCE EXTENDING THE EMERGENCY MORATORIUM ON THE ESTABLISHMENT OF NEW MARIJUANA CONSUMPTION ESTABLISHMENTS FOR AN ADDITIONAL SIX MONTH PERIOD.

WHEREAS, the City Council of the City of Englewood, Colorado established a moratorium on the establishment of new Marijuana Consumption Establishments by the passage of Ordinance No. 28, Series of 2015; and

WHEREAS, the original Moratorium was to run for six (6) months, terminating on January 21, 2016; and

WHEREAS, the Moratorium was intended to provide time for staff to work with the Englewood Liquor and Medical Marijuana Authority, and the Englewood Planning and Zoning Commission to establish licensing and zoning regulations; and

WHEREAS, an Ad Hoc Committee was formed to discuss the issues of regulating and licensing Marijuana Consumption Establishments with the goal of recommendations being presented to the Englewood Liquor and Medical Marijuana Authority and the Englewood Planning and Zoning Commission; and

WHEREAS, on October 22, 2015 the Englewood Liquor and Medical Marijuana Authority indicated that it desired to be the licensing agency for Marijuana Consumption Establishments in the City of Englewood; and

WHEREAS, the issue of zoning of Marijuana Consumption Establishments will be going before the Englewood Planning and Zoning Commission in December; and

WHEREAS, the issue of regulating and licensing of Marijuana Consumption Establishments went before the Englewood City Council at a Study Session on November 2, 2015; and

WHEREAS, the City Council referred the matter back to the Englewood Liquor and Medical Marijuana Authority to further address and make recommendations concerning:

- Whether a six (6) month inspection by the Fire Marshal should be required;
- Whether sale of food should be allowed;
- Whether security measures similar to retail marijuana should be adopted;
- Whether sharing of marijuana should be prohibited;
- Whether premise/plan should be inspected in same manner as liquor;
- Whether visible products should be prohibited;
- How should employees be protected from smoke and fumes;

- Whether hours of operation should be limited;
- Whether distancing from schools, parks and places where children congregate is appropriate;
- Whether requiring zoning to be located near public transportation is appropriate;
- Whether outdoor patios should be prohibited; and

WHEREAS, the Fire Marshal shall forward recommended changes to Englewood's Fire Code to the Denver Fire Chief for approval; and

WHEREAS, an additional six month moratorium is needed to provide time for the drafting, review, and public hearing on the proposed ordinances.

NOW, THEREFORE, BE IT ORDAINED BY THE CITY COUNCIL OF THE CITY OF ENGLEWOOD, COLORADO, THAT THERE SHALL BE A MORATORIUM ON THE ESTABLISHMENT OF NEW MARIJUANA CONSUMPTION ESTABLISHMENTS.

Section 1. The passage of this ordinance will preserve public property, health, peace and safety.

Section 2. The moratorium declares an additional six month moratorium on any new marijuana consumption establishments. Marijuana consumption establishments shall mean an organization, business, club, or commercial operation that allows its members or guests to burn, smoke, inhale the vapors of, or otherwise consume marijuana in any form on the premises of the business.

Section 3. During said moratorium the City Council directs City staff to develop appropriate recommendations to Council, consistent with the Colorado Constitution and State and local regulations.

Section 4. The City Council finds the provisions of this Ordinance are temporary in nature and are intended to be replaced by subsequent legislative enactment so that the moratorium or temporary suspension as specified in this Ordinance shall terminate on July 17, 2016.

Introduced, read in full, and passed on first reading on the 16th day of November, 2015.

Published by Title as a Bill for an Ordinance in the City's official newspaper on the 19th day of November, 2015.

Published as a Bill for an Ordinance on the City's official website beginning on the 18th day of November, 2015 for thirty (30) days.

Read by title and passed on final reading on the 7th day of December, 2015.

Published by title in the City's official newspaper as Ordinance No. ___, Series of 2015, on the 10th day of December, 2015.

Published by title on the City's official website beginning on the 9th day of December, 2015 for thirty (30) days.

This Ordinance shall take effect thirty (30) days after publication following final passage.

Joe Jefferson, Mayor

ATTEST:

Loucrishia A. Ellis, City Clerk

I, Loucrishia A. Ellis, City Clerk of the City of Englewood, Colorado, hereby certify that the above and foregoing is a true copy of the Ordinance passed on final reading and published by title as Ordinance No. ___, Series of 2015.

Loucrishia A. Ellis

COUNCIL COMMUNICATION

Meeting Date: December 7, 2015	**Agenda Item:** 11ci	**Subject:** Purchase of M2 106 Freightliner Dump Truck
Initiated By: Public Works	**Staff Source:** Right of Way Services Manager Larry Nimmo & Fleet Manager Pat White	

PREVIOUS COUNCIL ACTION
To promote and ensure a high quality of life, economic vitality, and a uniquely desirable community identity. Purchase was approved in the 2016 Budget through the Capital Equipment Replacement Fund (CERF).

RECOMMENDED ACTION
That Council approve by motion the purchase of a 2016 Freightliner M2 106 dump truck with an attached PB loader. This unit is being purchased through a cooperative award with the Colorado Department of Transportation.

BACKGROUND, ANALYSIS, AND ALTERNATIVES IDENTIFIED
The unit that is being replaced, Unit 3315, a 2008 Freightliner M2 106 dump truck with an attached PB loader, has met the minimum replacement criteria of years of service, hours of use, and maintenance dollars expended.

FINANCIAL IMPACT
$183,521 purchase price. Funds are available through the Capital Equipment Replacement Fund (CERF).

LIST OF ATTACHMENTS
Summary Specification Sheet
Copy of CDOT Award #311000482

SERVICENTER GARAGE

SUMMARY SPECIFICATION SHEET
FOR
NEW VEHICLES

STATE AWARD # CDOT Award 311000482

ENGLEWOOD BID# _____

MANUFACTURER OF VEHICLE Freightliner

MODEL OF VEHICLE M2 106 Chassis with PB loader

AIR CONDITIONING	**YES**	NO
AUTOMATIC TRANSMISSION	**YES**	NO
POWER WINDOWS	YES	**NO**
POWER DOOR LOCKS	YES	**NO**
4 WHEEL DRIVE	YES	**NO**
FLEX FUEL OPTION	YES	**NO**
CERF REPLACEMENT	**YES**	NO
NEW ADDITION TO FLEET	YES	**NO**

DEPARTMENT VEHICLE ASSIGNED TO 021003 Streets and Drainage

COMMENTS: This unit replaces Unit 3315, a 2008 Freightliner M2106 truck that has met the minimum replacement requirements of years of service, hours of use, and maintenance dollars expended. The replacement unit is being purchased through a Colorado Department of Transportation cooperative award. The unit will be purchased through Transwest Trucks for total cost of $183,521.00. The purchase was approved in the 2016 budget and the funds are available in the Capital Equipment Replacement Fund (CERF).

Prepared for:
MIKE MOORE
STATE OF CO AND POLITICAL SUB DIV

DENVER, CO 80222
Phone:

Prepared by:
Will Schafer
TRANSWEST TRUCK TRAILER RV
20770 E I76 FRONTAGE ROAD
BRIGHTON, CO 80603
Phone:

	Description	Weight Front	Weight Rear
	EXPECTED BODY/PAYLOAD CG HEIGHT ABOVE FRAME "XX" INCHES : 32.0 in		
Engine			
	CUM ISL 300 HP @ 2000 RPM, 2200 GOV RPM, 860 LB/FT @ 1300 RPM	640	30
Electronic Parameters			
	67 MPH ROAD SPEED LIMIT		
	CRUISE CONTROL SPEED LIMIT SAME AS ROAD SPEED LIMIT		
	5 MINUTE IDLE SHUTDOWN - TIMER RESET WITH CLUTCH AND SERVICE BRAKE		
	PTO MODE ENGINE RPM LIMIT - 1500 RPM		
	PTO RPM WITH CRUISE SET SWITCH - 700 RPM		
	PTO RPM WITH CRUISE RESUME SWITCH - 800 RPM		
	PTO MODE CANCEL VEHICLE SPEED - 5 MPH		
	PTO GOVERNOR RAMP RATE - 250 RPM PER SECOND		
	ENABLE REGENERATION IN PTO MODE		
	AUTOMATIC MAINTENANCE MONITOR WITH ALERT AT 5% OF INTERVAL REMAINING		
	PTO MINIMUM RPM - 700		
	REGEN INHIBIT SPEED THRESHOLD - 0 MPH		
Engine Equipment			
	2016 ONBOARD DIAGNOSTICS/2010 EPA/CARB/GHG14		
	2008 CARB EMISSION CERTIFICATION - CLEAN IDLE (INCLUDES 6X4 INCH LABEL ON LOWER FORWARD CORNER OF DRIVER DOOR)		
	STANDARD OIL PAN		
	ENGINE MOUNTED OIL CHECK AND FILL		
	ONE PIECE VALVE COVER		
	SIDE OF HOOD AIR INTAKE WITH FIREWALL MOUNTED DONALDSON AIR CLEANER		
	DR 12V 160 AMP 28-SI QUADRAMOUNT PAD ALTERNATOR WITH REMOTE BATTERY VOLT SENSE		
	(2) ALLIANCE MODEL 1131, GROUP 31, 12 VOLT MAINTENANCE FREE 1900 CCA THREADED STUD BATTERIES, NON FCCC ONLY		
	BATTERY BOX FRAME MOUNTED		

Description	Weight Front	Weight Rear
STANDARD BATTERY JUMPERS		
SINGLE BATTERY BOX FRAME MOUNTED LH SIDE UNDER CAB		
WIRE GROUND RETURN FOR BATTERY CABLES WITH ADDITIONAL FRAME GROUND RETURN		
NON-POLISHED BATTERY BOX COVER		
POSITIVE LOAD DISCONNECT WITH CAB MOUNTED CONTROL SWITCH MOUNTED OUTBOARD DRIVER SEAT	8	
POSITIVE AND NEGATIVE POSTS FOR JUMPSTART LOCATED ON FRAME NEXT TO STARTER	2	
CUMMINS TURBOCHARGED 18.7 CFM AIR COMPRESSOR WITH INTERNAL SAFETY VALVE		
STANDARD MECHANICAL AIR COMPRESSOR GOVERNOR		
AIR COMPRESSOR DISCHARGE LINE		
ELECTRONIC ENGINE INTEGRAL SHUTDOWN PROTECTION SYSTEM		
CUMMINS EXHAUST BRAKE INTEGRAL WITH VARIABLE GEOMETRY TURBO WITH ON/OFF DASH SWITCH	20	
RH OUTBOARD FRAME MOUNTED VERTICAL AFTERTREATMENT SYSTEM ASSEMBLY WITH TOPSTACK	**65**	**65**
ENGINE AFTERTREATMENT DEVICE, AUTOMATIC OVER THE ROAD REGENERATION AND DASH MOUNTED REGENERATION REQUEST SWITCH		
11 FOOT 06 INCH (138 INCH+0/-5 INCH) EXHAUST SYSTEM HEIGHT		
RH CURVED TOPSTACK		
6 GALLON DIESEL EXHAUST FLUID TANK		
100 PERCENT DIESEL EXHAUST FLUID FILL		
LH FORWARD FACE OF DIESEL EXHAUST FLUID TANK 48 TO 52 INCHES BACK OF CAB		
STANDARD DIESEL EXHAUST FLUID PUMP MOUNTING		
STANDARD DIESEL EXHAUST FLUID TANK CAP		
STAINLESS STEEL AFTERTREATMENT DEVICE/MUFFLER/TAILPIPE SHIELD		
HORTON DRIVEMASTER ON/OFF FAN DRIVE		
AUTOMATIC FAN CONTROL WITHOUT DASH SWITCH, NON ENGINE MOUNTED		

	Description	Weight Front	Weight Rear
	CUMMINS SPIN ON FUEL FILTER		
	COMBINATION FULL FLOW/BYPASS OIL FILTER		
	1100 SQUARE INCH ALUMINUM RADIATOR	20	
	ANTIFREEZE TO -34F, OAT (NITRITE AND SILICATE FREE) EXTENDED LIFE COOLANT		
	GATES BLUE STRIPE COOLANT HOSES OR EQUIVALENT		
	GATES POWERGRIP SHRINK BAND HOSE CLAMPS WHERE POSSIBLE		
	RADIATOR DRAIN VALVE		
	LOWER RADIATOR GUARD		
	PHILLIPS-TEMRO 1000 WATT/115 VOLT BLOCK HEATER	4	
	CHROME ENGINE HEATER RECEPTACLE MOUNTED UNDER LH DOOR		
	ALUMINUM FLYWHEEL HOUSING		
	ELECTRIC GRID AIR INTAKE WARMER		
	DELCO 12V 38MT HD STARTER WITH INTEGRATED MAGNETIC SWITCH		
Transmission			
	ALLISON 3500 RDS AUTOMATIC TRANSMISSION WITH PTO PROVISION	200	60
Transmission Equipment			
	ALLISON VOCATIONAL PACKAGE 223 - AVAILABLE ON 3000/4000 PRODUCT FAMILIES WITH VOCATIONAL MODELS RDS, HS, MH AND TRV		
	ALLISON VOCATIONAL RATING FOR ON/OFF HIGHWAY APPLICATIONS AVAILABLE WITH ALL PRODUCT FAMILIES		
	PRIMARY MODE GEARS, LOWEST GEAR 1, START GEAR 1, HIGHEST GEAR 6, AVAILABLE FOR 3000/4000 PRODUCT FAMILIES ONLY		
	SECONDARY MODE GEARS, LOWEST GEAR 1, START GEAR 1, HIGHEST GEAR 6, AVAILABLE FOR 3000/4000 PRODUCT FAMILIES ONLY		
	NEUTRAL AT STOP - DISABLED, FUELSENSE - DISABLED		
	VEHICLE INTERFACE WIRING CONNECTOR WITHOUT BLUNT CUTS, AT BACK OF CAB		
	ELECTRONIC TRANSMISSION CUSTOMER ACCESS CONNECTOR MOUNTED BACK OF CAB		

	Description	Weight Front	Weight Rear
	CUSTOMER INSTALLED CHELSEA 277 SERIES PTO		
	PTO MOUNTING, RH SIDE OF MAIN TRANSMISSION		
	MAGNETIC PLUGS, ENGINE DRAIN, TRANSMISSION DRAIN, AXLE(S) FILL AND DRAIN		
	PUSH BUTTON ELECTRONIC SHIFT CONTROL, DASH MOUNTED		
	TRANSMISSION PROGNOSTICS - ENABLED 2013		
	WATER TO OIL TRANSMISSION COOLER, IN RADIATOR END TANK		
	TRANSMISSION OIL CHECK AND FILL WITH ELECTRONIC OIL LEVEL CHECK		
	SYNTHETIC TRANSMISSION FLUID (TES-295 COMPLIANT)		
Front Axle and Equipment			
	DETROIT DA-F-14.7-3 14,700# FF1 71.5 KPI/3.74 DROP SINGLE FRONT AXLE		
	BENDIX ADB22X-V AIR DISC FRONT BRAKES	50	
	NON-ASBESTOS FRONT BRAKE LINING		
	FRONT DISC BRAKE ROTORS		
	SKF SCOTSEAL PLUS XL FRONT OIL SEALS		
	VENTED FRONT HUB CAPS WITH WINDOW, CENTER AND SIDE PLUGS - OIL		
	STANDARD SPINDLE NUTS FOR ALL AXLES		
	FRONT AIR DISC BRAKE INTERNAL ADJUSTERS		
	TRW TAS-85 POWER STEERING	40	
	POWER STEERING PUMP		
	2 QUART SEE THROUGH POWER STEERING RESERVOIR		
	ORGANIC SAE 80/90 FRONT AXLE LUBE		
Front Suspension			
	14,600# FLAT LEAF FRONT SUSPENSION	250	
	GRAPHITE BRONZE BUSHINGS WITH SEALS - FRONT SUSPENSION		
Rear Axle and Equipment			
	RS-23-160 23,000# R-SERIES SINGLE REAR AXLE		180
	6.14 REAR AXLE RATIO		

	Description	Weight Front	Weight Rear
	IRON REAR AXLE CARRIER WITH STANDARD AXLE HOUSING		
	MXL 17T MERITOR EXTENDED LUBE MAIN DRIVELINE WITH HALF ROUND YOKES		
	BENDIX ADB22X-V AIR DISC REAR BRAKES		-5
	NON-ASBESTOS REAR BRAKE LINING		
	ASPHALT SPREADER CLEARANCE REAR BRAKE GEOMETRY		
	REAR DISC BRAKE ROTORS		
	REAR BRAKE DUST SHIELDS		5
	SKF SCOTSEAL PLUS XL REAR OIL SEALS		
	AIR DISC LONGSTROKE 1-DRIVE AXLE SPRING PARKING CHAMBERS		
	REAR AIR DISC BRAKE INTERNAL ADJUSTERS		
	ORGANIC SAE 80/90 REAR AXLE LUBE		
Rear Suspension			
	23,000# FLAT LEAF SPRING REAR SUSPENSION WITH HELPER AND RADIUS ROD		120
	SPRING SUSPENSION - NO AXLE SPACERS		
	STANDARD AXLE SEATS IN AXLE CLAMP GROUP		
	FORE/AFT CONTROL RODS		
Brake System			
	AIR BRAKE PACKAGE		
	WABCO 4S/4M ABS WITHOUT TRACTION CONTROL		
	REINFORCED NYLON, FABRIC BRAID AND WIRE BRAID CHASSIS AIR LINES		
	FIBER BRAID PARKING BRAKE HOSE		
	STANDARD BRAKE SYSTEM VALVES		
	STANDARD AIR SYSTEM PRESSURE PROTECTION SYSTEM		
	STD U.S. FRONT BRAKE VALVE		
	RELAY VALVE WITH 5-8 PSI CRACK PRESSURE, NO REAR PROPORTIONING VALVE		
	BW AD-9 BRAKE LINE AIR DRYER WITH HEATER	20	
	AIR DRYER MOUNTED INBOARD ON LH RAIL		
	STEEL AIR BRAKE RESERVOIRS		

	Description	Weight Front	Weight Rear
	CLEAR FRAME RAILS FROM BACK OF CAB TO FRONT REAR SUSPENSION BRACKET, BOTH RAILS OUTBOARD		
	PULL CABLES ON ALL AIR RESERVOIR(S)		
Trailer Connections			
	UPGRADED CHASSIS MULTIPLEXING UNIT		
	UPGRADED BULKHEAD MULTIPLEXING UNIT		
Wheelbase & Frame			
	4975MM (196 INCH) WHEELBASE		
	11/32X3-1/2X10-15/16 INCH STEEL FRAME (8.73MMX277.8MM/0.344X10.94 INCH) 120KSI	120	120
	1525MM (60 INCH) REAR FRAME OVERHANG		
	FRAME OVERHANG RANGE: 51 INCH TO 60 INCH	10	-40
	CALC'D BACK OF CAB TO REAR SUSP C/L (CA) : 130.45 in		
	CALCULATED EFFECTIVE BACK OF CAB TO REAR SUSPENSION C/L (CA) : 111.85 in		
	CALC'D FRAME LENGTH - OVERALL : 285.39		
	CALC'D SPACE AVAILABLE FOR DECKPLATE : 130.45 in		
	CALCULATED FRAME SPACE LH SIDE : 165.8 in		
	CALCULATED FRAME SPACE RH SIDE : 135.29 in		
	SQUARE END OF FRAME		
	FRONT CLOSING CROSSMEMBER		
	STANDARD WEIGHT ENGINE CROSSMEMBER		
	STANDARD MIDSHIP #1 CROSSMEMBER(S)		
	STANDARD REARMOST CROSSMEMBER		
	STANDARD SUSPENSION CROSSMEMBER		
Chassis Equipment			
	THREE-PIECE 14 INCH PAINTED STEEL BUMPER WITH COLLAPSIBLE ENDS	30	
	FRONT TOW HOOKS - FRAME MOUNTED	15	
	BUMPER MOUNTING FOR SINGLE LICENSE PLATE		
	FENDER AND FRONT OF HOOD MOUNTED FRONT MUDFLAPS		
	GRADE 8 THREADED HEX HEADED FRAME FASTENERS		

Prepared for:
MIKE MOORE
STATE OF CO AND POLITICAL SUB DIV

DENVER, CO 80222
Phone:

Prepared by:
Will Schafer
TRANSWEST TRUCK TRAILER RV
20770 E I76 FRONTAGE ROAD
BRIGHTON, CO 80603
Phone:

	Description	Weight Front	Weight Rear
Fuel Tanks			
	50 GALLON/189 LITER SHORT RECTANGULAR ALUMINUM FUEL TANK - LH	20	
	RECTANGULAR FUEL TANK(S)		
	PLAIN ALUMINUM/PAINTED STEEL FUEL/HYDRAULIC TANK(S) WITH PAINTED BANDS		
	FUEL TANK(S) FORWARD		
	BLACK STEP FINISH		
	FUEL TANK CAP(S)		
	ALLIANCE FUEL FILTER/WATER SEPARATOR WITH HEATED BOWL AND PRIMER PUMP		
	EQUIFLO INBOARD FUEL SYSTEM		
	HIGH TEMPERATURE REINFORCED NYLON FUEL LINE		
Tires			
	MICHELIN XZE 12R22.5 16 PLY RADIAL FRONT TIRES	50	
	MICHELIN XDE M/S 11R22.5 14 PLY RADIAL REAR TIRES		28
Hubs			
	CONMET PRESET PLUS IRON FRONT HUBS		
	CONMET PRESET PLUS IRON REAR HUBS		
Wheels			
	MAXION WHEELS 90541 22.5X8.25 10-HUB PILOT 6.20 INSET 2-HAND STEEL DISC FRONT WHEELS		
	MAXION WHEELS 90541 22.5X8.25 10-HUB PILOT 2-HAND STEEL DISC REAR WHEELS		
	FRONT WHEEL MOUNTING NUTS		
	REAR WHEEL MOUNTING NUTS		
Cab Exterior			
	106 INCH BBC FLAT ROOF ALUMINUM CONVENTIONAL CAB		
	AIR CAB MOUNTS		
	NONREMOVABLE BUGSCREEN MOUNTED BEHIND GRILLE		
	LH AND RH GRAB HANDLES		
	HOOD MOUNTED CHROMED PLASTIC GRILLE		
	CHROME HOOD MOUNTED AIR INTAKE GRILLE		
	FIBERGLASS HOOD		

	Description	Weight Front	Weight Rear
	TUNNEL/FIREWALL LINER		
	SINGLE 14 INCH ROUND POLISHED AIR HORN ROOF MOUNTED	4	
	DUAL ELECTRIC HORNS		
	SINGLE HORN SHIELD		
	DOOR LOCKS AND IGNITION SWITCH KEYED THE SAME WITH (4) KEYS		
	REAR LICENSE PLATE MOUNT END OF FRAME		
	INTEGRAL HEADLIGHT/MARKER ASSEMBLY WITH CHROME BEZEL		
	LED AERODYNAMIC MARKER LIGHTS		
	DAYTIME RUNNING LIGHTS		
	FREIGHTLINER LED FLANGE MOUNTED STOP/TAIL/TURN LIGHTS WITH SEPARATE INCANDESCENT BACKUP LIGHTS		5
	STANDARD FRONT TURN SIGNAL LAMPS		
	DUAL WEST COAST MOLDED-IN COLOR HEATED MIRRORS		
	DOOR MOUNTED MIRRORS		
	102 INCH EQUIPMENT WIDTH		
	LH AND RH 8 INCH MOLDED-IN COLOR CONVEX MIRRORS MOUNTED UNDER PRIMARY MIRRORS		
	STANDARD SIDE/REAR REFLECTORS		
	DUAL LEVEL CAB ENTRY STEPS ON BOTH SIDES		
	2-STAGE ELECTRIC HORN AND HAZARD LAMP ALERT CONTROLLED BY PARTICULATE FILTER REGENERATION REQUIRED STATUS		
	63X14 INCH TINTED REAR WINDOW		
	TINTED DOOR GLASS LH AND RH WITH TINTED NON-OPERATING WING WINDOWS		
	RH AND LH ELECTRIC POWERED WINDOWS, PASSENGER SWITCHES ON DOOR(S)	8	
	1-PIECE TINTED ROPED-IN WINDSHIELD		
	2 GALLON WINDSHIELD WASHER RESERVOIR WITH FLUID LEVEL INDICATOR; FRAME MOUNTED		
Cab Interior			
	OPAL GRAY VINYL INTERIOR		
	MOLDED PLASTIC DOOR PANEL WITHOUT VINYL INSERT WITH ALUMINUM KICKPLATE LOWER DOOR		

Prepared for:
MIKE MOORE
STATE OF CO AND POLITICAL SUB DIV

DENVER, CO 80222
Phone:

Prepared by:
Will Schafer
TRANSWEST TRUCK TRAILER RV
20770 E I76 FRONTAGE ROAD
BRIGHTON, CO 80603
Phone:

Description	Weight Front	Weight Rear
MOLDED PLASTIC DOOR PANEL WITHOUT VINYL INSERT WITH ALUMINUM KICKPLATE LOWER DOOR		
BLACK MATS WITH SINGLE INSULATION		
DASH MOUNTED ASH TRAYS AND LIGHTER		
FORWARD ROOF MOUNTED CONSOLE WITH UPPER STORAGE COMPARTMENTS WITHOUT NETTING		
IN DASH STORAGE BIN		
CENTER STORAGE CONSOLE MOUNTED ON BACKWALL	20	
(2) CUP HOLDERS LH AND RH DASH		
GRAY/CHARCOAL FLAT DASH		
SMART SWITCH EXPANSION MODULE		
5 LB. FIRE EXTINGUISHER	10	
FIRST AID KIT	2	
HEATER, DEFROSTER AND AIR CONDITIONER		
STANDARD HVAC DUCTING		
MAIN HVAC CONTROLS WITH RECIRCULATION SWITCH		
STANDARD HEATER PLUMBING WITH BALL SHUTOFF VALVES		
DENSO HEAVY DUTY AIR CONDITIONER COMPRESSOR		
BINARY CONTROL, R-134A		
STANDARD INSULATION		
SOLID-STATE CIRCUIT PROTECTION AND FUSES WITH SPARE FUSE KIT		
12V NEGATIVE GROUND ELECTRICAL SYSTEM		
DOME LIGHT WITH 3-WAY SWITCH ACTIVATED BY LH AND RH DOORS		
LH AND RH ELECTRIC DOOR LOCKS		
(1) 12 VOLT POWER SUPPLY IN DASH		
TRIANGULAR REFLECTORS WITHOUT FLARES	10	
PREMIUM HIGH BACK AIR SUSPENSION DRIVER SEAT WITH 3 CHAMBER AIR LUMBAR, INTEGRATED CUSHION EXTENSION, FORWARD AND REAR CUSHION TILT, ADJUSTABLE SHOCK ABSORBER	70	
BASIC HIGH BACK NON SUSPENSION PASSENGER SEAT		
LH AND RH INTEGRAL DOOR PANEL ARMRESTS		

	Description	Weight Front	Weight Rear
	BLACK MORDURA CLOTH DRIVER SEAT COVER		
	BLACK MORDURA CLOTH PASSENGER SEAT COVER		
	3 POINT FIXED D-RING RETRACTOR DRIVER AND PASSENGER SEAT BELTS		
	ADJUSTABLE TILT AND TELESCOPING STEERING COLUMN	10	
	4-SPOKE 18 INCH (450MM) STEERING WHEEL		
	DRIVER AND PASSENGER INTERIOR SUN VISORS		
Instruments & Controls			
	GRAY DRIVER INSTRUMENT PANEL		
	GRAY CENTER INSTRUMENT PANEL		
	BLACK GAUGE BEZELS		
	LOW AIR PRESSURE INDICATOR LIGHT AND AUDIBLE ALARM		
	2 INCH PRIMARY AND SECONDARY AIR PRESSURE GAUGES		
	DASH MOUNTED AIR RESTRICTION INDICATOR WITH GRADUATIONS		
	97 DB BACKUP ALARM		3
	ELECTRONIC CRUISE CONTROL WITH SWITCHES IN LH SWITCH PANEL		
	KEY OPERATED IGNITION SWITCH AND INTEGRAL START POSITION; 4 POSITION OFF/RUN/START/ACCESSORY		
	ICU3S, 132X48 DISPLAY WITH DIAGNOSTICS, 28 LED WARNING LAMPS AND DATA LINKED		
	HEAVY DUTY ONBOARD DIAGNOSTICS INTERFACE CONNECTOR LOCATED BELOW LH DASH		
	2 INCH ELECTRIC FUEL GAUGE		
	PROGRAMMABLE RPM CONTROL - ELECTRONIC ENGINE		
	ELECTRICAL ENGINE COOLANT TEMPERATURE GAUGE		
	2 INCH TRANSMISSION OIL TEMPERATURE GAUGE		
	ENGINE AND TRIP HOUR METERS INTEGRAL WITHIN DRIVER DISPLAY		
	(1) DASH MOUNTED PTO SWITCH WITH INDICATOR LAMP	5	
	NO LANE DEPARTURE WARNING SYSTEM		

	Description	Weight Front	Weight Rear
	ELECTRIC ENGINE OIL PRESSURE GAUGE		
	AM/FM RADIO WITH FRONT AND REAR AUXILIARY INPUTS AND J1939	10	
	DASH MOUNTED RADIO		
	(2) RADIO SPEAKERS IN CAB		
	AM/FM ANTENNA MOUNTED ON FORWARD LH ROOF	2	
	POWER AND GROUND STUDS IN/UNDER DASH		
	RADIO WIRING WITH POWER CUTOFF WHEN VEHICLE IN REVERSE GEAR		
	ELECTRONIC MPH SPEEDOMETER WITH SECONDARY KPH SCALE, WITHOUT ODOMETER		
	STANDARD VEHICLE SPEED SENSOR		
	ELECTRONIC 3000 RPM TACHOMETER		
	IDLE LIMITER, ELECTRONIC ENGINE		
	PRE-TRIP LAMP INSPECTION, ALL OUTPUTS FLASH, WITH SMART SWITCH		
	DIGITAL VOLTAGE DISPLAY INTEGRAL WITH DRIVER DISPLAY		
	SINGLE ELECTRIC WINDSHIELD WIPER MOTOR WITH DELAY AND ARCTIC TYPE BLADES		
	MARKER LIGHT SWITCH INTEGRAL WITH HEADLIGHT SWITCH		
	ONE VALVE PARKING BRAKE SYSTEM WITH WARNING INDICATOR		
	SELF CANCELING TURN SIGNAL SWITCH WITH DIMMER, WASHER/WIPER AND HAZARD IN HANDLE		
	INTEGRAL ELECTRONIC TURN SIGNAL FLASHER WITH HAZARD LAMPS OVERRIDING STOP LAMPS		
Design			
	PAINT: ONE SOLID COLOR		
Color			
	CAB COLOR A: L0006EB WHITE ELITE BC		
	BLACK, HIGH SOLIDS POLYURETHANE CHASSIS PAINT		
	NO FUEL TANK CABINET PAINT		
	POWDER WHITE (N0006EA) FRONT WHEELS/RIMS (PKWHT21, TKWHT21, W, TW)		

	Description	Weight Front	Weight Rear
	POWDER WHITE (N0006EA) REAR WHEELS/RIMS (PKWHT21, TKWHT21, W, TW)		
	BUMPER PAINT: FP24812 ARGENT SILVER DUPONT FLEX		
	STANDARD E COAT/UNDERCOATING		

Certification / Compliance

U.S. FMVSS CERTIFICATION, EXCEPT SALES CABS AND GLIDER KITS

TOTAL VEHICLE SUMMARY

Weight Summary

	Weight Front	Weight Rear	Total Weight
Factory Weight+	7474 lbs	4074 lbs	11548 lbs
Total Weight+	7474 lbs	4074 lbs	11548 lbs

Extended Warranty

EPA 2013 CUMMINS ISL ENGINE EXTENDED WARRANTY DC2, 3 YEARS/100,000 MILES/160 000 KM FEX

TOWING EXTENDED/ROADSIDE SERVICE WARRANTY, 2 YEAR/UNLIMITED MILES/KM, $550 CAP

(+) Weights shown are estimates only.
If weight is critical, contact Customer Application Engineering.

QUOTATION

M2 106 CONVENTIONAL CHASSIS

SET BACK AXLE - TRUCK

CUM ISL 300 HP @ 2000 RPM, 2200 GOV RPM, 860 LB/FT @ 1300 RPM

ALLISON 3500 RDS AUTOMATIC TRANSMISSION WITH PTO PROVISION

RS-23-160 23,000# R-SERIES SINGLE REAR AXLE

23,000# FLAT LEAF SPRING REAR SUSPENSION WITH HELPER AND RADIUS ROD

DETROIT DA-F-14.7-3 14,700# FF1 71.5 KPI/3.74 DROP SINGLE FRONT AXLE

14,600# FLAT LEAF FRONT SUSPENSION

106 INCH BBC FLAT ROOF ALUMINUM CONVENTIONAL CAB

4975MM (196 INCH) WHEELBASE

11/32X3-1/2X10-15/16 INCH STEEL FRAME (8.73MMX277.8MM/0.344X10.94 INCH) 120KSI

1525MM (60 INCH) REAR FRAME OVERHANG

			PER UNIT		TOTAL
VEHICLE PRICE	TOTAL # OF UNITS (1)	$	182,295	$	182,295
EXTENDED WARRANTY		$	1,400	$	1,400
DEALER INSTALLED OPTIONS		$	0	$	0
CUSTOMER PRICE BEFORE TAX		$	*183,695*	$	*183,695*
TAXES AND FEES					
FEDERAL EXCISE TAX (FET)		$	(174.0)	$	(174.0)
TAXES AND FEES		$	0	$	0
OTHER CHARGES		$	0	$	0
TRADE-IN					
TRADE-IN ALLOWANCE		$	(0)	$	(0)
BALANCE DUE	(LOCAL CURRENCY)	$	183,521	$	183,521

QUOTATION DETAILS

OTHER DEALER COSTS AND CREDITS				
PB LOADER MODEL L100 CT With Pull Tarp	$	98,160	$	98,160

Daimler Truck Financial

Financing that works for you.

See your local dealer for a competitive quote from Daimler Truck Financial, or contact us at

Daimler Truck Financial offers a variety of finance, lease and insurance solutions to fit your business needs. For more information about our products and services, visit our website at

SHIFT CHART

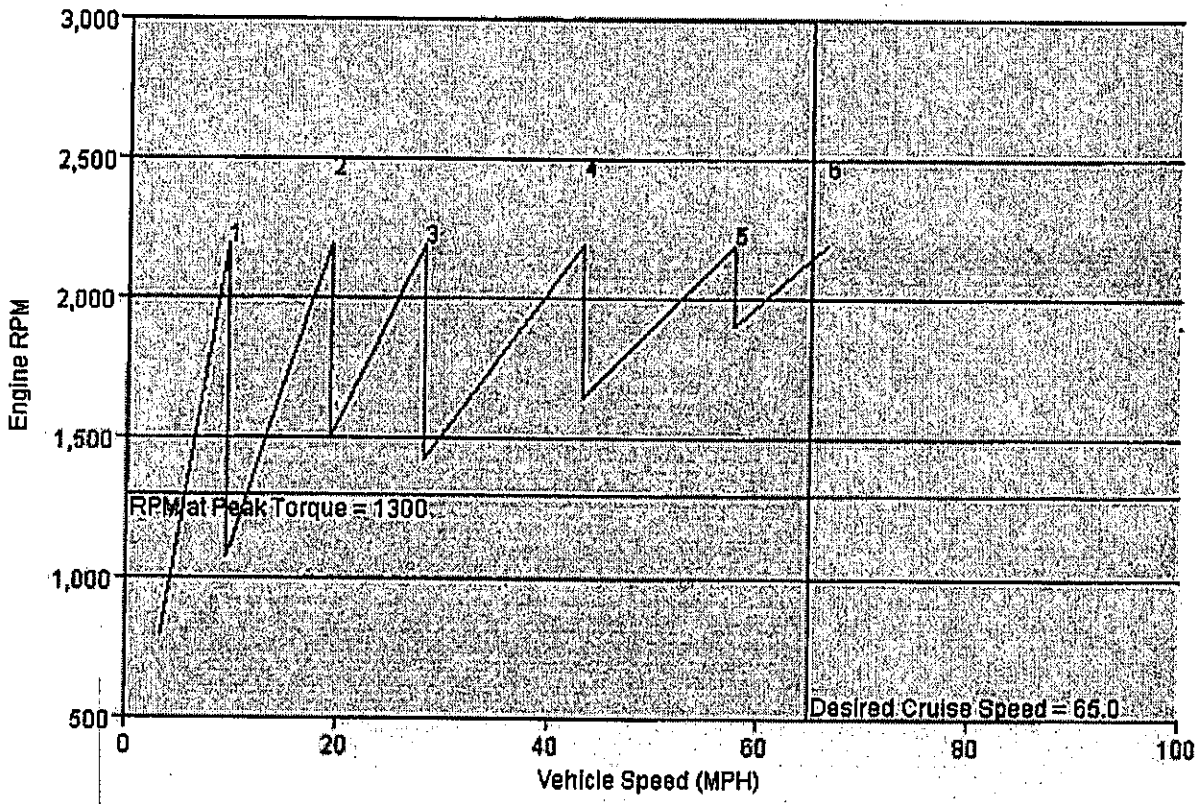

VEHICLE SPECIFICATIONS SUMMARY - SHIFT CHART

Model	M2106
Cab Size (829)	106 INCH BBC FLAT ROOF ALUMINUM CONVENTIONAL CAB
Desired Cruise Speed (mph)	65.0

Engine (101)	CUM ISL 300 HP @ 2000 RPM, 2200 GOV RPM, 860 LB/FT @ 1300 RPM
RPM at Peak Torque	1300
Governed RPM	2200
Transmission (342)	ALLISON 3500 RDS AUTOMATIC TRANSMISSION WITH PTO PROVISION
Gear Ratio: LL	N/A
Gear Ratio: L	N/A
Gear Ratio: 1	4.59
Gear Ratio: 2	2.25
Gear Ratio: 3	1.54
Gear Ratio: 4	1
Gear Ratio: 5	0.75
Gear Ratio: 6	0.65
Gear Ratio: 7	N/A
Gear Ratio: 8	N/A
Gear Ratio: 9	N/A
Gear Ratio: 10	N/A
Gear Ratio: 11	N/A
Gear Ratio: 12	N/A
Gear Ratio: 13	N/A
Gear Ratio: 14	N/A
Gear Ratio: 15	N/A
Gear Ratio: 16	N/A
Gear Ratio: 17	N/A
Gear Ratio: 18	N/A
Auxiliary Transmission (352)	NO AUXILIARY TRANSMISSION
Low Gear Ratio	N/A
High Gear Ratio	N/A
Transfer Case (373)	NO TRANSFER CASE
Low Gear Ratio	N/A
High Gear Ratio	N/A
Rear Axle (420)	RS-23-160 23,000# R-SERIES SINGLE REAR AXLE
Number of Speeds	1
Rear Axle Gear Ratio(s)	6.14 REAR AXLE RATIO
Rear Tires (094)	MICHELIN XDE M/S 11R22.5 14 PLY RADIAL REAR TIRES
Revolutions per Mile	498

TABLE SUMMARY - SHIFT CHART

Transmission Gear	Transmission Gear Ratio	Rear Axle Ratio	Overall Gear Ratio	Percent Split	RPM After Shift	MPH at Peak Torque RPM	MPH at Governed
1	4.59	6.14	28.18	N/A	800	5.6	9.4
2	2.25	6.14	13.82	104.0	1078	11.3	19.2
3	1.54	6.14	9.46	46.1	1506	16.6	28.0
4	1.00	6.14	6.14	54.0	1429	25.5	43.2
5	0.75	6.14	4.60	33.3	1650	34.0	57.6
6	0.65	6.14	3.99	15.4	1907	39.2	66.4

Performance calculations are estimates only. If performance calculations are critical, please contact Customer Application Engineering.

DIMENSIONS

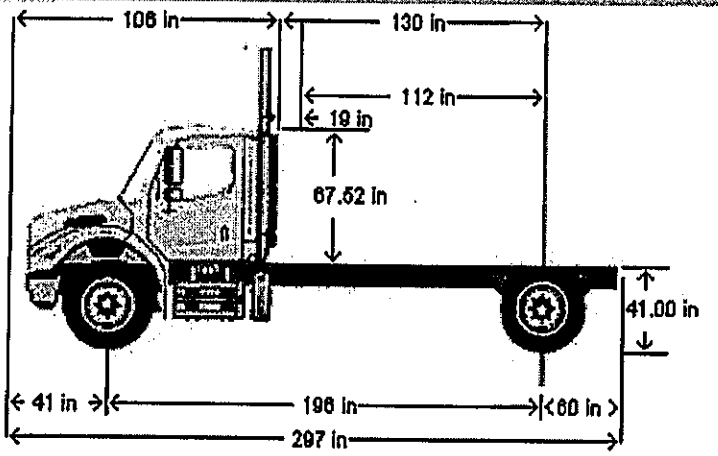

VEHICLE SPECIFICATIONS SUMMARY - DIMENSIONS

Model M2106
Wheelbase (545) ..... 4975MM (196 INCH) WHEELBASE
Rear Frame Overhang (552) ..... 1525MM (60 INCH) REAR FRAME OVERHANG
Fifth Wheel (578) ..... NO FIFTH WHEEL
- Mounting Location (577) ..... NO FIFTH WHEEL LOCATION
- Maximum Forward Position (in) 0
- Maximum Rearward Position (in) 0
- Amount of Slide Travel (in) 0
- Slide Increment (in) 0
- Desired Slide Position (in) 0.0

Cab Size (829) ..... 106 INCH BBC FLAT ROOF ALUMINUM CONVENTIONAL CAB
Sleeper (682) ..... NO SLEEPER BOX/SLEEPERCAB
Exhaust System (016) ..... RH OUTBOARD FRAME MOUNTED VERTICAL AFTERTREATMENT SYSTEM ASSEMBLY WITH TOPSTACK

TABLE SUMMARY - DIMENSIONS

Dimensions	Inches
Bumper to Back of Cab (BBC)	106.3
Bumper to Centerline of Front Axle (BA)	40.7
Min. Cab to Body Clearance (CB)	3.0
Back of Cab to Centerline of Rear Axle(s) (CA)	130.4
Effective Back of Cab to Centerline of Rear Axle(s) (Effective CA)	111.8
Back of Cab Protrusions (Exhaust/Intake) (CP)	18.6
Back of Cab Protrusions (Side Extenders/Trim Tab) (CP)	0.0
Back of Cab Protrusions (CNG Tank)	0.0
Back of Cab Clearance (CL)	18.6
Back of Cab to End of Frame	190.4
Cab Height (CH)	67.5
Wheelbase (WB)	196.0
Frame Overhang (OH)	60.0
Overall Length (OAL)	296.7
Rear Axle Spacing	0.0
Unladen Frame Height at Centerline of Rear Axle	41.0

Performance calculations are estimates only. If performance calculations are critical, please contact Customer Application Engineering.

CITY OF Englewood

CITY COUNCIL AGENDA REQUEST

Regular: ☒ Study Sessi...

1st 00 Dec
reg agenda

Council Meeting Date:	December 7, 2015
Submitting Department:	Public Works
Person Submitting Request:	Pat White, Larry Nimmo
Estimated Time For Staff Presentation:	5 minutes

Description of Agenda Item:

Approval for purchase of 2016 Freightliner MS 106 dump truck with PB loader in the amount of $183,521.

Additional Comments:

The purchase was approved in the 2016 budget, and the funds are available through the Capital Equipment Replacement Fund (CERF).

NOTE: Work with City Attorney's Office to prepare resolutions and ordinances.

-Find Agenda Request Form template and save it in L:Shared Data\Agenda Request Form.

-Put Council Communications & exhibits in L:Shared Data\Agenda City Council Materials\2015\Meeting Date folder by Thursday, 11 days, before Regular Council Meeting.

-Put Study Session material in L:Shared Data\Study Session Agenda Material\2015\Meeting Date folder by noon the Wednesday before that Study Session.

CITY OF Englewood

CITY COUNCIL AGENDA REQUEST

Regular: ☒ **Study Session: ☐**

Council Meeting Date:
Submitting Department: Public Works
Person Submitting Request: Pat White, Larry Nimmo
Estimated Time For Staff Presentation: 5 Minutes

Description of Agenda Item: Approval for purchase 2016 Freightliner M2 106 dump truck with PB loader in the amount $183,521.00.

Additional Comments: The purchase was approved in the 2016 budget and the funds are available through the Capital Equipment Replacement Fund (CERF).

NOTE: Work with City Attorney's Office to prepare resolutions and ordinances.

-Find Agenda Request Form template and save it in L:Shared Data\Agenda Request Form.

-Put Council Communications & exhibits in L:Shared Data\Agenda City Council Materials\2015\Meeting Date folder by Thursday, 11 days, before Regular Council Meeting.

-Put Study Session material in L:Shared Data\Study Session Agenda Material\2015\Meeting Date folder by noon the Wednesday before that Study Session.

COUNCIL COMMUNICATION

Meeting Date:	Agenda Item:	Subject:
December 7, 2015	11cii	CERF Fund Purchase of Four Wheel Drive Loader for the Utilities Department

Initiated By:	Staff Source:
Utilities Department	Fleet Manager Pat White & Utilities Director Tom Brennan

PREVIOUS COUNCIL ACTION

The existing Volvo L50D wheel loader was purchased in 2004.

RECOMMENDED ACTION

The Administrator of the Servicenter recommends Council approval, by motion, of the purchase of a Volvo IFB-15-015 four wheel drive loader from Power Equipment Company in the amount of $116,816.00.

BACKGROUND, ANALYSIS, AND ALTERNATIVES IDENTIFIED

The proposed four-wheel drive loader is for a Volvo IFB-15-015 four wheel front loader with optional electric heated mirrors and pallet frame and forks will be replacing Unit 1409, a 2004 Volvo L50D wheel loader. The loader will be used primarily for handling materials such as rock, roadbase, asphalt and bedding materials necessary for laying water and sewer mains, sewer point repairs, snow removal, yard maintenance and pipe installation.

This piece of equipment is also used for removal and recycling asphalt and concrete on projects and handling bundles of pipe and pallets. The loader also provides a finish grade on trenching and excavations.

FINANCIAL IMPACT

This purchase will replace the existing 11-year old front loader under the CERF replacement schedule.

Englewood received four bids on November 12, 2015 for Item #IFB-15-015 for a four wheel drive loader. The lowest, acceptable bid was from Power Equipment Company in the amount of $114,093.00 with optional add-ons.

Funds are available through the CERF Program.

LIST OF ATTACHMENTS

Summary Specification Sheet & Bid Tabulation Sheet

City of Englewood Bid Tabulation Sheet

Bid Opening Date: November 12, 2015 2:00 P.M. MDT

ITEM BID: IFB-15-015 Four Wheel Drive Loader

Apparent Low Bidder

Vendor	Receipt of Addendum 1	Four Wheel Drive Loader	Parts Manual	Shop Service Manual	Total Bid	*Exceptions/Comments*
Wagner Equipment Company						
18000 Smith Road						
Aurora, CO 80011						
(303) 739-3000						Weight of Machine is
Andy Kratt	Y	$ 134,215.00	$ 94.00	$ 678.00	$ 134,987.00	26,770.00
Power Equipment Company						
500 E 62nd Ave						
Denver, CO 80201						
(303) 288-6801						
Andy Remmo	Y	$ 113,643.00	$ 150.00	$ 300.00	$ 114,093.00	
Titan Machinery						
9600 E 104th Ave						
Henderson, CO 80640						
(303) 286-7000						
Miguel Garcia	Y	$ 144,068.39	$ 240.37	$ 652.37	$ 144,961.13	
Honnen Equipment						
5055 E 72nd Ave						
Commerce City, CO 80022						
(303) 287-7506						Warranty does not
Steve Stotz	Y	$ 127,042.00	$ 375.00	$ 575.00	$ 127,992.00	include travel charges

COUNCIL COMMUNICATION

Meeting Date:	Agenda Item:	Subject:
December 7, 2015	11ciii	Advanced Utility Systems Annual Bill

Initiated By:	Staff Source:
Water & Sewer Board	Tom Brennan, Director of Utilities

PREVIOUS COUNCIL ACTION

None.

RECOMMENDED ACTION

The Utilities Staff recommends Council approval, by motion, of the Advanced Utility Systems annual maintenance billing in the amount of $61,496.86.

BACKGROUND, ANALYSIS, AND ALTERNATIVES IDENTIFIED

The Advanced Utility Systems billing is for an annual maintenance fee for the CIS (Customer Information System) computer program system established in 2004. CIS produces and maintains Englewood's data base for the water, sewer, storm and concrete inside quarterly billings and the annual outside City sewer billings. CIS also processes and credits payments received by check, credit card or cash. The Englewood Water and Sewer Board, at their November 10, 2015 meeting, approved the Advanced Utility Systems annual maintenance billing.

FINANCIAL IMPACT

The $61,496.86 billing is a contractual obligation under the CIS Agreement of 2003 and is a budgeted item under the Water, Sewer and Storm Water Funds.

LIST OF ATTACHMENTS

Advanced Utility Systems Invoice #MN00088528

WATER & SEWER BOARD
MINUTES

NOVEMBER 10, 2015

Present: Wiggins, Penn, Burns, Moore, Lay, Habenicht, Olson, Oakley

Absent: Gillit

Also present: Tom Brennan, Director of Utilities
John Bock, Manager of Administration

The meeting was called to order at 5:02

1) MINUTES OF THE OCTOBER 13, 2015 MEETING.

The Board received the Minutes of the October 13, 2015 Water & Sewer Board Meeting.

Motion: To approve the Minutes of the October 13, 2015 meeting.

Moved: Burns Seconded: Habenicht

Motion approved unanimously.

2. GUEST: JOHN CHRISTIAN – 4557 S. LOGAN ST. – SEWER REFUND.

It was discovered during a sewer back-up that the house at 4557 S. Logan St., owned by Mr. John Christian, was on a septic system. It was never connected to the City's sewer system, but being billed for sewer service. John Bock, Manager of Administration, refunded the amount Mr. Christian paid back to the Statute of Limitations date. The amount refunded was $1,474.44. Mr. Christian appeared before the Board to request a refund on his sewer bill beyond the Statute of Limitations, back to when he purchased the property on September 18, 1998 to cover expenses related to the back-up. The additional refund would be $845.61.

The Board expressed concern about setting a precedent on refunds beyond the Statute of Limitations. The Board noted that this would be a single exception, extended only to the current owner and not any prior property owners.

Motion: To approve Mr. Christian's request for a sewer billing refund beyond the Statute of Limitations back to when he purchased the property on September 18, 1998 in the amount of $845.61. This is a single exception beyond the Statute of Limitations and should not be considered a precedent.

Moved : Burns Seconded: Moore

Motion carried unanimously.

2. CITY DITCH ASSIGNMENT OF LICENSE AGREEMENT FROM WILDACRES TO QUEST.

The Wildacres, LLC City Ditch License Agreement was approved by Council on September 19, 2005 for crossing the City Ditch along Santa Fe with a 2" water line and an electrical service line. Wildacres has requested an Assignment of the City Ditch License Agreement to 2T Acres LLC as the owner of record.

The License Agreement allows the 2" water and electrical line to cross 12" beneath Englewood's 48" City Ditch pipe from Santa Fe Drive to the adjacent property located at 8025 S. Santa Fe Dr.

Motion: To recommend Council approval of the Assignment of License Agreement from Wildacres, LLC for crossing the City Ditch to 2 T Acres LLC.

Moved: Burns Seconded: Lay

Motion carried unanimously.

3. MUNICIPAL CODE CHANGES – DAMAGE TO FIXTURES, RESPONSIBILITY AND METER REQUIREMENTS.

Changes to the Title 12-1A-4 and 12-1A-8 Water section of the Municipal Code were noted over a period of time. These changes will add updated requirements, provide consistent terminology and remove obsolete practices.

Motion: Recommend Council approval of Ordinance changes to Title 12, Chapter 1A, Sections 4 and 8.

Discussion ensued regarding changing the existing practice where the City provides water line replacement from the stop box to the curb stop in the street. Members of the Board recommended further discussion at a future meeting on continuing the water line replacement service for properties zoned residential, but not solely owner occupied. Tom Brennan, Director of Utilities, will gather additional information to differentiate between residential and commercial zoning in the R-1, A-B & C and R-2.

Duplexes and apartment buildings were discussed. Penn and John Moore noted they believe the program is good business practice that will benefit Englewood citizens and that the water line replacement program should continue.

The Board concurred to table the Motion pending further information at a future meeting.

4. DENVER POST ARTICLE DATED NOV. 2, 2015, "CHURCH THAT FLOODED IN THE SPRING HAS MORE PROBLEMS WITH WATER."

The Board received the article that appeared in the Denver Post regarding the water service line leak at the Dragon's Den at 285 and Clarkson St., which is owned by the Sanctuary Christian Fellowship Church. A church member had dug into State ROW without a permit to find the source of the leak. Tom noted that the City Distribution/Collection crew cut off the service line off at the main.

The owner received two estimates from contractors and has retained an engineering firm to resolve the problem. They are going to try to fix the service line by boring into 285 and replacing the line. They will keep Englewood apprised of their progress.

5. MEADOW CREEK DAM/DENVER WATER BILLING

The City of Englewood and Climax Molybdenum Company jointly own the Cabin-Meadow Creek System, which includes Meadow Creek Reservoir. Under the 1965 Agreement with Denver Water, Denver operates and maintains this system. The City of Englewood and Climax Molybdenum reimburse Denver for the operation, maintenance, repair and replacement costs incurred by Denver in operating the system. Climax owns 55% and Englewood owns 45%.

Denver Water invoices Englewood quarterly, and in turn, Englewood invoices Climax for their share. For this invoice, Denver Water replaced the Meadow Creek Dam Outlet

Works including a new valve house and five valves. Denver will be sending Englewood a 10-year capital project plan for budgeting purposes.

Motion: To recommend Council approval of the Denver Water Board invoice for the Meadow Creek Dam Outlet Works Replacement Project in the amount of $329,878.14.

Moved: Oakley Seconded: Moore

Motion approved unanimously.

6. ADVANCED ULTILITY SYSTEMS ANNUAL BILL.

The Advanced Utility Systems billing is for an annual maintenance fee for the CIS (Customer Information System) computer program system established in 2004. CIS produces and maintains Englewood's data base for the water, sewer, storm and concrete inside quarterly billings and the annual outside City sewer billings.

Motion: Recommend Council approval of the Advanced Utility Systems annual billing in the amount of $61,496.86.

Moved: Penn Seconded: Lay

Motion approved unanimously.

The meeting adjourned at 5:55 p.m.

The next meeting will be held Tuesday, January 12, 2015 at 5:00 in the Community Development Conference Room.

Respectfully submitted,

Cathy Burrage
Recording Secretary

ENGLEWOOD WATER & SEWER BOARD

PHONE VOTE

NOVEMBER 17, 2015

A phone vote was taken from the members of the Englewood Water and Sewer Board for the November 10, 2015 minutes:

Motion:	To approve the minutes of the November 10, 2015 Water and Sewer Board meeting.
Moved:	Habenicht Seconded: Wiggins
Ayes:	Wiggins, Penn, Burns, Moore, Lay, Habenicht, Gillit, Olson, Oakley
Nays:	None
Members not reached:	None

Motion carried unanimously.

The next Water and Sewer Board meeting will be held at 5:00 p.m. on Tuesday, January 12, 2016 in the Community Development Conference Room.

Sincerely,

Cathy Burrage
Recording Secretary

ADVANCED™
UTILITY SYSTEMS
a Division of N. Harris Computer Corporation

Remit To: N. Harris Computer Corporation

Chicago, IL 60693-0621

Invoice	MN00088528
Date	10/31/2015
Page	1 of 1

Ship To
Englewood, City of
Don Ingle
Englewood Civic Center
1000 Englewood Pkwy
Englewood, CO 80110
USA

Bill to
Englewood, City of
Don Ingle
Englewood Civic Center
1000 Englewood Pkwy
Englewood, CO 80110
USA

PO Number	Customer No.	Salesperson ID	Shipping Method	Payment Terms
	ENG01A		LOCAL DELIVERY	Receipt

Ordered	Item Number	Description	Unit Price	Ext Price
1.00	AUS - MAINTENANCE	CIS Infinity Support	US$61,496.86	US$61,496.86
0.00	NOTE	Annual Maintenance Support for the period of Jan 01, 2016 to Dec 31, 2016	US$0.00	US$0.00

Please note that the payment is due on or before the maintenance period start date. Therefore, please allow at least 10 business days prior to the due date to mail your payment.

Invoice Questions? Please call Maria El Rami at 613-226-5511 ext 2242 OR e-mail melrami@harriscomputer.com

Subtotal	US$61,496.86
Misc	US$0.00
Tax	US$0.00
Freight	US$0.00
Trade Discount	US$0.00
Total	US$61,496.86

COUNCIL COMMUNICATION

Meeting Date:	Agenda Item:	Subject:
December 7, 2015	11civ	Meadow Creek Dam/Denver Water Billing

Initiated By:	Staff Source:
Water & Sewer Board	Tom Brennan – Director of Utilities

PREVIOUS COUNCIL ACTION

None.

RECOMMENDED ACTION

The Utilities Staff recommends Council approval, by motion, of the Denver Water Board invoice for the Meadow Creek Dam Outlet Works Replacement Project in the amount of $329,878.14.

BACKGROUND, ANALYSIS, AND ALTERNATIVES IDENTIFIED

The City of Englewood and Climax Molybdenum Company jointly own the Cabin-Meadow Creek System which includes Meadow Creek Reservoir. Under the 1995 Intergovernmental Agreement between Denver Water, City of Englewood, Climax Molybdenum and Denver operates and maintains this system. The City of Englewood and Climax reimburse Denver for the operation, maintenance, repair and replacement costs incurred by Denver in operating the system. For this invoice, Denver Water replaced the Meadow Creek Dam Outlet Works which included a new valve house and five valves.

Climax Molybdenum owns 55% and Englewood owns 45%. Denver Water invoices Englewood quarterly, and in turn Englewood invoices Climax for their share. The Englewood Water and Sewer Board, at their November 10, 2015 meeting, approved the Denver Water billing for the Meadow Creek Dam Outlet works Replacement Project.

FINANCIAL IMPACT

The $329,878.14 billing is a contractual obligation under the 1995 Intergovernmental Agreement with Denver to maintain the Cabin-Meadow Creek system. Englewood will pay $329,878.14 with $181,432.98 to be reimbursed by Climax Molybdenum.

This is a 2015 Capital Project item under the Water Fund - Source & Supply.

LIST OF ATTACHMENTS

Denver Water Acct. #242554
Minutes of the Nov. 10, 2015 Water Board Meeting & Phone vote of Nov. 17, 2015

WATER & SEWER BOARD
MINUTES

NOVEMBER 10, 2015

Present: Wiggins, Penn, Burns, Moore, Lay, Habenicht, Olson, Oakley

Absent: Gillit

Also present: Tom Brennan, Director of Utilities
John Bock, Manager of Administration

The meeting was called to order at 5:02

1) MINUTES OF THE OCTOBER 13, 2015 MEETING.

The Board received the Minutes of the October 13, 2015 Water & Sewer Board Meeting.

Motion: To approve the Minutes of the October 13, 2015 meeting.

Moved: Burns Seconded: Habenicht

Motion approved unanimously.

2. GUEST: JOHN CHRISTIAN – 4557 S. LOGAN ST. – SEWER REFUND.

It was discovered during a sewer back-up that the house at 4557 S. Logan St., owned by Mr. John Christian, was on a septic system. It was never connected to the City's sewer system, but being billed for sewer service. John Bock, Manager of Administration, refunded the amount Mr. Christian paid back to the Statute of Limitations date. The amount refunded was $1,474.44. Mr. Christian appeared before the Board to request a refund on his sewer bill beyond the Statute of Limitations, back to when he purchased the property on September 18, 1998 to cover expenses related to the back-up. The additional refund would be $845.61.

The Board expressed concern about setting a precedent on refunds beyond the Statute of Limitations. The Board noted that this would be a single exception, extended only to the current owner and not any prior property owners.

Motion: To approve Mr. Christian's request for a sewer billing refund beyond the Statute of Limitations back to when he purchased the property on September 18, 1998 in the amount of $845.61. This is a single exception beyond the Statute of Limitations and should not be considered a precedent.

Moved : Burns Seconded: Moore

Motion carried unanimously.

2. CITY DITCH ASSIGNMENT OF LICENSE AGREEMENT FROM WILDACRES TO QUEST.

The Wildacres, LLC City Ditch License Agreement was approved by Council on September 19, 2005 for crossing the City Ditch along Santa Fe with a 2" water line and an electrical service line. Wildacres has requested an Assignment of the City Ditch License Agreement to 2T Acres LLC as the owner of record.

The License Agreement allows the 2" water and electrical line to cross 12" beneath Englewood's 48" City Ditch pipe from Santa Fe Drive to the adjacent property located at 8025 S. Santa Fe Dr.

Motion: To recommend Council approval of the Assignment of License Agreement from Wildacres, LLC for crossing the City Ditch to 2 T Acres LLC.

Moved: Burns Seconded: Lay

Motion carried unanimously.

3. MUNICIPAL CODE CHANGES – DAMAGE TO FIXTURES, RESPONSIBILITY AND METER REQUIREMENTS.

Changes to the Title 12-1A-4 and 12-1A-8 Water section of the Municipal Code were noted over a period of time. These changes will add updated requirements, provide consistent terminology and remove obsolete practices.

Motion: Recommend Council approval of Ordinance changes to Title 12, Chapter 1A, Sections 4 and 8.

Discussion ensued regarding changing the existing practice where the City provides water line replacement from the stop box to the curb stop in the street. Members of the Board recommended further discussion at a future meeting on continuing the water line replacement service for properties zoned residential, but not solely owner occupied. Tom Brennan, Director of Utilities, will gather additional information to differentiate between residential and commercial zoning in the R-1, A-B & C and R-2.

Duplexes and apartment buildings were discussed. Penn and John Moore noted they believe the program is good business practice that will benefit Englewood citizens and that the water line replacement program should continue.

The Board concurred to table the Motion pending further information at a future meeting.

4. DENVER POST ARTICLE DATED NOV. 2, 2015, "CHURCH THAT FLOODED IN THE SPRING HAS MORE PROBLEMS WITH WATER."

The Board received the article that appeared in the Denver Post regarding the water service line leak at the Dragon's Den at 285 and Clarkson St., which is owned by the Sanctuary Christian Fellowship Church. A church member had dug into State ROW without a permit to find the source of the leak. Tom noted that the City Distribution/Collection crew cut off the service line off at the main.

The owner received two estimates from contractors and has retained an engineering firm to resolve the problem. They are going to try to fix the service line by boring into 285 and replacing the line. They will keep Englewood apprised of their progress.

5. MEADOW CREEK DAM/DENVER WATER BILLING

The City of Englewood and Climax Molybdenum Company jointly own the Cabin-Meadow Creek System, which includes Meadow Creek Reservoir. Under the 1965 Agreement with Denver Water, Denver operates and maintains this system. The City of Englewood and Climax Molybdenum reimburse Denver for the operation, maintenance, repair and replacement costs incurred by Denver in operating the system. Climax owns 55% and Englewood owns 45%.

Denver Water invoices Englewood quarterly, and in turn, Englewood invoices Climax for their share. For this invoice, Denver Water replaced the Meadow Creek Dam Outlet

Works including a new valve house and five valves. Denver will be sending Englewood a 10-year capital project plan for budgeting purposes.

Motion: To recommend Council approval of the Denver Water Board invoice for the Meadow Creek Dam Outlet Works Replacement Project in the amount of $329,878.14.

Moved: Oakley Seconded: Moore

Motion approved unanimously.

6. ADVANCED ULTILITY SYSTEMS ANNUAL BILL.

The Advanced Utility Systems billing is for an annual maintenance fee for the CIS (Customer Information System) computer program system established in 2004. CIS produces and maintains Englewood's data base for the water, sewer, storm and concrete inside quarterly billings and the annual outside City sewer billings.

Motion: Recommend Council approval of the Advanced Utility Systems annual billing in the amount of $61,496.86.

Moved: Penn Seconded: Lay

Motion approved unanimously.

The meeting adjourned at 5:55 p.m.

The next meeting will be held Tuesday, January 12, 2015 at 5:00 in the Community Development Conference Room.

Respectfully submitted,

Cathy Burrage
Recording Secretary

ENGLEWOOD WATER & SEWER BOARD

PHONE VOTE

NOVEMBER 17, 2015

A phone vote was taken from the members of the Englewood Water and Sewer Board for the November 10, 2015 minutes:

Motion:	To approve the minutes of the November 10, 2015 Water and Sewer Board meeting.
Moved:	Habenicht Seconded: Wiggins
Ayes:	Wiggins, Penn, Burns, Moore, Lay, Habenicht, Gillit, Olson, Oakley
Nays:	None
Members not reached:	None

Motion carried unanimously.

The next Water and Sewer Board meeting will be held at 5:00 p.m. on Tuesday, January 12, 2016 in the Community Development Conference Room.

Sincerely,

Cathy Burrage
Recording Secretary

INVOICE

DENVER WATER

Invoice Date:	10/27/2015
Due Date:	11/26/2015
Account #:	242554
Page:	1 of 1

City of Englewood
Attn: John Bock
1000 Englewood Parkway
Englewood CO 80111-2373

Meadow Creek Dam outlet works replacement

Invoice Date	Invoice #	Remarks	Amount
10/27/2015	296360	W97218 Meadow Creek Dam	329,878.14

Total Amount Invc	$329,878.14
Tax Amount	$0.00
Amount Due	$329,878.14

PLEASE MAKE CHECKS PAYABLE TO: DENVER WATER

EASE KEEP THIS PORTION FOR YOUR RECORDS.

EASE RETURN THIS PORTION WITH YOUR PAYMENT.

DENVER WATER

ACCOUNT NUMBER	DUE DATE
242554	Nov 26, 2015
INVOICE NUMBER	**AMOUNT DUE**
296360	$329,878.14

Please enter amount enclosed

$

Write account number on check and make payable to Denver Water

CITY OF ENGLEWOOD
1000 Englewood Parkway
ENGLEWOOD CO 80111-2373

00 080 906128 001000001 80217 3343

DENVER WATER
PO BOX 173343
DENVER, CO 80217-3343

700 0000296360 0000000329878140

COUNCIL COMMUNICATION

Meeting Date:	Agenda Item:	Subject:
December 7, 2015	11cv	City Ditch Assignment of License Agreement from Wildacres LLC (8025 S. Santa Fe Dr.) to 2T Acres LLC
Initiated By:	**Staff Source:**	
Utilities Department	Tom Brennan, Director of Utilities	

PREVIOUS COUNCIL ACTION

None.

RECOMMENDED ACTION

The Utilities Staff recommends Council approval, by Resolution, of the Assignment of License Agreement from Wildacres, LLC for crossing the City Ditch to 2 T Acres LLC.

BACKGROUND, ANALYSIS, AND ALTERNATIVES IDENTIFIED

The License Agreement with K.C. Ensor, Green Valley Turf Co., and Wildacres LLC was approved by Council on April 7, 2003 for crossing the City Ditch along S. Santa Fe Dr. with a 2" water line and an electrical service line. Wildacres, LLC has requested to assign the License Agreement to 2T Acres, LLC pursuant to Paragraph 9 of the April 7, 2003 License Agreement

The License Agreement allows the 2" water and electrical line to cross 12" beneath Englewood's 48" City Ditch pipe from S. Santa Fe Drive to the adjacent property located at 8025 S. Santa Fe Dr. The City has reviewed the Consent to Assignment of the License Agreement. The Englewood Water & Sewer Board, at their November 10, 2015 meeting, recommended approval of the Assignment of License Agreement from Wildacres to 2 T Acres.

FINANCIAL IMPACT

None.

LIST OF ATTACHMENTS

Resolution
Assignment of City Ditch License Agreement
Minutes of the Nov. 10, 2015 Water & Sewer Board Meeting & Phone Vote of Nov. 17, 2015

RESOLUTION NO. ____
SERIES OF 2015

A RESOLUTION FOR THE APPROVAL TO AUTHORIZE THE "CONSENT TO ASSIGNMENT" OF THE 2003 CITY DITCH LICENSE AGREEMENT FROM WILDACRES, LLC. TO 2T Acres, LLC.

WHEREAS, the Englewood City Council approved a License Agreement and Temporary License Agreement with K.C. Ensor, Green Valley Turf Co., and Wildacre, LLC for crossing the City Ditch by the passage of Ordinance No. 27, Series of 2003; and

WHEREAS, Wildacres, LLC has requested A "Consent to Assignment" of the City Ditch License Agreement to 2T Acres, LLC pursuant to Paragraph 9 of the 2003 License Agreement; and

WHEREAS, the City has reviewed the assignment of the City License Agreement as to form; and

WHEREAS, the Englewood Water and Sewer Board reviewed and recommends Council approval of the City Ditch "Consent to Assignment" of the License Agreement from Wildacres, LLC for crossing the City Ditch to 2T Acres, LLC at their November 10, 2015 meeting.

NOW, THEREFORE, BE IT RESOLVED BY THE CITY COUNCIL OF THE CITY OF ENGLEWOOD, COLORADO, AS FOLLOWS:

Section 1. The "Consent to Assignment" between Wildacres, LLC, 2T Acres, LLC and the City of Englewood, Colorado, attached hereto as Exhibit A, is hereby accepted and approved by the Englewood City Council.

Section 2. The Director of Utilities is authorized to execute the "Consent to Assignment" for and on behalf of the Englewood City Council.

ADOPTED AND APPROVED this 7th day of December, 2015.

ATTEST:

_____
Joe Jefferson, Mayor

_____
Loucrishia A. Ellis, City Clerk

I, Loucrishia A. Ellis, City Clerk for the City of Englewood, Colorado, hereby certify the above is a true copy of Resolution No. _____, Series of 2015.

_____
Loucrishia A. Ellis, City Clerk

EXHIBIT A

Consent to Assignment

This Consent to Assignment is entered into between the City of Englewood, a municipal corporation of the State of Colorado ("City"), Wildacre, LLC, a Colorado limited liability company ("Wildacre" or "Assignor"), and 2T Acres, LLC, a Colorado limited liability company ("Assignee"), this 20th day of August, 2015.

WHEREAS, the City and Wildacre, K.C. Ensor, Jr., individually and as trustee of K.C. Ensor Trust, Mary Edith Wilkins, Barbara Ensor, and Green Valley Turf Co (collectively "Licensees") entered into a License Agreement dated April 7, 2003, recorded with the Recorder, Arapahoe County, on April 23, 2003, Reception No. B3086050 ("License Agreement"), under the terms of which Licensees were granted an exclusive license to construct and maintain a bridge and related roadway across the City's Ditch right-of-way described therein for access by Licensees to and from South Santa Fe Drive and to and from Licensees' respective real properties located on the west side of Santa Fe Drive; and

WHEREAS, the said bridge construction has been completed and is located within the existing driveway as depicted on the License Agreement; and

WHEREAS, Wildacre has entered into a contract to sell all of its real property and improvements known as 8025 South Santa Fe Drive, Littleton, CO to 2T Acres, LLC,, and desires to assign its rights and obligations under the License Agreement to 2T Acres, LLC pursuant to Section 9 thereof; and

WHEREAS, 2T Acres, LLC has agreed to accept all of Wildacre's obligations under the License Agreement arising after date hereof by its Acceptance contained herein.

NOW, THEREFORE, in consideration of the mutual covenants herein contained, City, Wildacre, and 2T Acres, LLC agree as follows:

1. Wildacre hereby assigns all of its right, title and interest under the License Agreement to 2T Acres, LLC.

2. City hereby consents to the assignment of all of the rights granted to Wildacre under the License Agreement to 2T Acres, LLC.

3. 2T Acres, LLC, by its Acceptance, hereby accepts the rights and obligations of Wildacre under the License Agreement and agrees to be bound by the terms thereof.

4. City hereby releases Wildacre from all responsibility under the provisions of the License Agreement and acknowledges that Wildacre has performed all obligations on its part to be performed under the License Agreement through date hereof.

5. Each of the parties hereto represents that it is not aware of any default under the License Agreement by any other party.

IN WITNESS WHEREOF, this instrument has been executed as of the day and year first above written.

APPROVED:

CITY:
CITY OF ENGLEWOOD, COLORADO

By: _____
Tom Brennan
Director of Utilities

ASSIGNOR;
WILDACRE, LLC, a Colorado limited liability company

By
Manager

ACCEPTED BY ASSIGNEE:
2T ACRES, LLC

By
Manager
Address: 8025 S Santa Fe Drive
Littleton CO 80120

STATE OF COLORADO)
) ss.
COUNTY OF ~~ARAPAHOE~~ Denver)

The foregoing instrument was acknowledged before me this 20th day of August, 2015, by Terry D. Swanson, DVM, as Manager of Wildacre, LLC, a Colorado limited liability company.

Witness my hand and official seal.
My commission expires: 5/25/2019

Notary Public

JENNIFER A YORK
Notary Public
State of Colorado
My Commission Expires: May 25, 2019
LIC# 19914006269

STATE OF COLORADO)
) ss.
COUNTY OF ~~ARAPAHOE~~ Denver)

The foregoing instrument was acknowledged before me this 20th day of August, 2015, by Kelly B. Tisher, as Manager of 2T Acres, LLC, a Colorado limited liability company.

Witness my hand and official seal.
My commission expires: 5/25/2019

Notary Public

JENNIFER A YORK
Notary Public
State of Colorado
My Commission Expires: May 25, 2019
LIC# 19914006269

COUNCIL COMMUNICATION

Date	Agenda Item	Subject
December 7, 2015	11cvi	Resolution approving Finding of Fact and Conclusions in the matter of the appeal of Case #2015-09, 4635 S. Pearl
INITIATED BY Community Development Department	**STAFF SOURCE** Michael Flaherty, Interim Director	

COUNCIL GOAL AND PREVIOUS COUNCIL ACTION

This matter came before City Council on November 16, 2015. After taking testimony, Council voted to uphold the Planning and Zoning Commission's decision and deny this appeal.

Pursuant to the Englewood Muncipal Code, Section 16-2-18(C):
"The decision of the Council shall be made in writing, and a copy of the written decision shall be given to the appellant."

Following Council approval of the Finding of Fact and Conclusions, staff will provide each of the appellants with the written decision.

RECOMMENDED ACTION

Staff recommends approval of this Resolution and forward the Findings of Fact and Conclusions to the appellants.

BACKGROUND, ANALYSIS AND ALTERNATIVES IDENTIFIED

On September 22, 2015, the Planning and Zoning Commission held a public hearing on Urban Lot Case #2015-09, for the proposed development at 4635 South Pearl Street. The Commission approved the development on an 8-1 vote. Findings of Fact were approved by the Commission on October 6, 2015.

The decision of the Commission was appealed by three parties, Katie Coons-4655 S. Pearl, Cynthia Brown-4633 S. Pearl and Jeremy and Cassandra Letkomiller-2856 S. Lincoln.

On November 16, 2015, City Council held a public hearing on the appeal of the case. After receiving testimony, Council denied the appeal on a 4-3 vote.

FINANCIAL IMPACT

There is no financial impact.

LIST OF ATTACHMENTS

City Council Resolution
Findings of Facts and Conclusion in the matter of appeal of Case #2015-09, 4635 South Pearl Street, Urban Lot Development.

CITY OF ENGLEWOOD CITY COUNCIL

IN THE MATTER OF THE APPEAL OF CASE #2015-09 4635 SOUTH PEARL STREET, URBAN LOT DEVELOPMENT	)	
INITIATED BY:	)	
Katie Coons	)	**FINDINGS OF FACT AND CONCLUSIONS OF THE CITY OF ENGLEWOOD CITY COUNCIL**
Englewood, Colorado 80113	)	
Cynthia Brown	)	
Englewood, Colorado 80113	)	
Jeremy and Cassandra Letkomiller	)	
Englewood, Colorado 80113	)	

Council Members Present: Jefferson, Gillit, Yates, Olson, Barrentine, Martinez, Russell

Council Members Absent: None

This matter came before the Englewood City Council on November 16, 2015, in the City Council Chambers of the Englewood Civic Center upon an appeal, filed by Katie Coons, Cynthia Brown, and Jeremy and Cassandra Letkomiller, of Planning and Zoning Commission's decision in Case #2015-09, 4635 South Pearl Street, Urban Lot Development.

Testimony was received from Brook Bell, Planner II, Christine Martin, Amber Alsadi, Cassandra Letkomiller, and Jeremy Letkomiller. Written information in the form of a Council Communication and supporting documentation were incorporated into the record.

After considering the statements of the witnesses and reviewing the pertinent documents, members of the Englewood City Council made the following Findings and Conclusions.

FINDINGS OF FACT

1. **THAT** the Public Hearing was initiated upon an appeal of Planning and Zoning Commission's decision in Case #2015-09, 4635 South Pearl Street, Urban Lot Development filed by Katie Coons, Cynthia Brown, and Jeremy and Cassandra Letkomiller.

2. **THAT** notice of the Public Hearing was published on the official City of Englewood website from November 4, 2015 through November 16, 2015, and published in the *Englewood Herald* on November 5, 2015.

3. **THAT** Englewood City Council approved Ordinance 45, Series 2014 on September 2, 2014 amending the City's Unified Development Code and establishing the Urban Lot designation.

4. **THAT** public testimony was received by staff and four members of the public.

5. **THAT** the lot cannot otherwise be used for any purpose permitted within the zone district applicable to the property.

    - *The only permitted use for a 3,125 square foot lot in an R-1-C zone district is a one-unit dwelling on an Urban Lot.*
    - *The subject property cannot be used for any other principal or accessory use listed in Table 16-5-1.1: Table of Allowed Uses.*

6. **THAT** the waiver, or modification, if granted, is necessary to afford relief with the least modification of the development or dimensional standards otherwise applicable to the property.

    - *The proposed house has a footprint of approximately 985 square feet and is two stories with a total of approximately 1,600 square feet of habitable space.*
    - *The proposed one-unit dwelling would not encroach into the required setbacks for an Urban Lot.*
    - *The proposed site plan complies with the minimum lot area, maximum permitted lot coverage, minimum lot width, maximum height, minimum setbacks, and bulk plane requirements for an Urban Lot in the R-1-C zone district.*

7. **THAT** the proposed development is consistent with the spirit and intent of the Comprehensive Plan.

    - *The proposed one-unit dwelling is consistent with the Housing Goals and Objectives listed in the Roadmap Englewood: 2003 Englewood Comprehensive Plan, specifically Objective 1-2, Objective 1-3, and Objective 2-1.*

8. **THAT** the lot coverage, bulk plane, height, setbacks, and massing of the proposed development will not vary substantially from the surrounding properties or alter the essential character of the neighborhood.

    - *The proposed site plan and elevations comply with the lot area, lot coverage, lot width, height, setback, and bulk plan requirements for an Urban Lot in the R-1-C zone district.*
    - *The proposed development will not alter the essential character of the neighborhood.*
    - *The proposed development will improve a currently vacant lot in the neighborhood.*

9. **THAT** the proposed development is compatible with the established development patterns and intent of the zone district.

    - *The established development patterns for the neighborhood include pre and postwar wood frame and brick single family homes on a traditional city grid.*
    - *The majority of the homes have sloping roofs and the architectural styles are varied.*
    - *The proposed one-unit dwelling is compatible with the established development patterns and intent of the zone district.*

CONCLUSION

THAT a majority of City Council concurred with the Findings of the Planning and Zoning Commission in Case #2015-09, 4635 South Pearl Street, Urban Lot Development, and voted to uphold the Planning and Zoning Commission's decision, and to **DENY** the appeal.

DECISION

MOTION: TO ACCEPT THE FINDINGS OF THE PLANNING AND ZONING COMMISSION AND TO DENY THE APPEAL

Moved by Gillit; **Seconded by** Olson

Vote:	Motion passed **(summary:** Yes=4 No=3)
Yes:	Gillit, Olson, Yates, Martinez
No:	Barrentine, Russell, Jefferson
Absent:	None
Abstain:	None

Motion passed.

These decisions and Findings of Fact and Conclusion are effective as of November 16, 2015.

BY ORDER OF THE ENGLEWOOD CITY COUNCIL

_____
Joe Jefferson, Mayor

ATTEST:

_____
Loucrishia A. Ellis, City Clerk

RESOLUTION NO. _____
SERIES OF 2015

A RESOLUTION APPROVING FINDING OF FACT AND CONCLUSIONS IN THE MATTER OF THE APPEAL OF CASE NO. 2015-09 PERTAINING TO 4635 SOUTH PEARL STREET, URBAN LOT DEVELOPMENT.

WHEREAS, the Englewood Planning and Zoning Commission held a public hearing on Urban Lot Case #2015-09, for the proposed development at 4635 South Pearl Street in September 2015; and

WHEREAS, the Englewood Planning and Zoning Commission reviewed the Findings or Fact and approved the development on Urban Lot Case # 2015-09 located at 4635 South Pearl Street on October 6, 2015; and

WHEREAS, the decision of the Englewood Planning and Zoning Commission was appealed by three parties to the Englewood City Council; and

WHEREAS, the City Council held a public hearing on the appeal of Urban Lot Case #2015-09 on November 16, 2015 and voted to uphold the Planning and Zoning Commission's decision and deny the Appeal.

NOW, THEREFORE, BE IT RESOLVED BY THE CITY COUNCIL OF THE CITY OF ENGLEWOOD, COLORADO, AS FOLLOWS:

Section 1. The City Council of the City of Englewood, Colorado hereby approves the Finding of Fact and Conclusions of Urban Lot Case #2015-09 and deny the Appeal.

ADOPTED AND APPROVED this 7th day of December, 2015.

ATTEST:

_____
Joe Jefferson, Mayor

_____
Loucrishia A. Ellis, City Clerk

I, Loucrishia A. Ellis, City Clerk for the City of Englewood, Colorado, hereby certify the above is a true copy of Resolution No. _____, Series of 2015.

_____
Loucrishia A. Ellis, City Clerk

RECEIVED
DEC 1 2015

CITY OF Englewood

ADMINISTRATIVE SERVICES

ENGLEWOOD, CO
OFFICE OF THE CITY ATTORNEY

Request No. RFP-15-018
Date: December 8, 2015

REQUEST FOR PROPOSAL

Executive Recruitment for City Attorney

The City of Englewood is requesting sealed proposals from qualified service providers for an independent contractor to provide executive search, recruitment and assessment services for the City Attorney position.

The City of Englewood will accept proposals until 2:00 p.m. MST, Friday, January 8, 2016. Request for Proposals will be received at the City of Englewood, Department of Administrative Services, Procurement Division, 1000 Englewood Parkway, Englewood, CO 80110-2373. If hand delivering proposals, please deliver to Central Cashiering located on the third floor of the Civic Center.

Interested firms are asked to mark the envelope **"Executive Recruitment for City Attorney Proposal"** in the lower left hand corner with the **Request #RFP-15-018** shown on the front of the envelope. Proposals received later than the date and hour specified will not be accepted under any circumstance, and any so received shall be returned to the firm unopened. In addition, facsimiles and any other electronic method of sending proposals will not be acceptable and will be rejected upon receipt. Firms will be expected to allow adequate time for delivery of their proposals by air freight, postal service, or other means.

The City of Englewood has contracted with BidNet (RMEPS) Rocky Mountain E-Purchasing Site and utilizes a central bid notification system created for the City of Englewood. This system will allow vendors to register online and receive notification of new bids, amendments and awards. If you do not have internet access, please call the BidNet support group at (800) 677-1997 extension #214. Vendors with internet access should review the registration options at the following website:

http://www.RockyMountainBidSystem.com

Any questions or clarifications concerning this Request for Proposal (RFP) shall be submitted in writing by e-mail to Alicia Stutz, Procurement Administrator to: **astutz@englewoodgov.org**. The title and request number should be referenced on all correspondence. All questions must be received by December 18, 2015 at 12:00 P.M. MST. All responses to questions/clarifications will be listed on the Rocky Mountain E-Purchasing website address as listed above as an addendum prior to the RFP submittal deadline. The City will not be bound or responsible for any explanations or interpretations other than those given in writing as set forth in this Request for Proposal. No oral interpretations shall be binding on the City.

All material submitted in connection with this document becomes the property of the City of Englewood. Any and all information received by the City shall become public record and shall be open to public inspection should an award of contract result from this solicitation, except to the extent the bidding entity designates trade secrets or other proprietary data to be confidential.

The City of Englewood will accept Request for Proposals from qualified individuals, organizations or firms interested in providing executive search, recruitment and assessment services for the City of Englewood. No reimbursement will be made by the City of Englewood for any costs incurred prior to a "Formal Contract Agreement."

Scanned or re-typed responses: If in its response, proposer either electronically scans, re-types, or in some way reproduces the City's published proposal package, then in the event of any conflict between the terms and provisions of the City's published proposal package, or any portion thereof, and the terms and provisions of the response made by the proposer the City's proposal package as published shall control. Furthermore, if an alteration of any kind to the City's published proposal package is discovered after the contract is executed and is or is not being performed; the contract is subject to immediate cancellation.

The City of Englewood shall have the right to reject any or all proposals, and to waive any informalities or irregularities therein and request new proposals when required. In addition, the City reserves the right to accept the proposal deemed most advantageous to the best interest of the City. Any award made in response to this Request for Proposals will be made to that responsible individual, organization or firm whose offer will technically be most advantageous to the City.

I. Introduction/Schedule

The City Attorney for the City of Englewood is retiring effective January 8, 2016. The City Council seeks the assistance of a professional executive search firm in filling the upcoming vacancy. Council has requested that the selected search firm work in tandem with the Englewood Human Resources Division (see Scope of Services enumerated in Appendix I)

A schedule of key dates for the RFP process has been established as follows:

December 8, 2015	Issuance of RFP
December 18, 2015, 12 p.m.	Question submission deadline
January 7, 2016, 2 p.m.	Proposal submission deadline
January 12, 2016 *	Short-list selection notification
January 18, 2016 *	Interviews
February 1, 2016 *	Selection of search firm announced by Council

*Tentative dates

II. Proposal Requirements

A. Proposals must be typed or legibly printed in ink. The use of erasable ink is not permitted. All corrections made by the Proposer must be initialed in ink by the authorized agent of the Proposer.

B. Proposals must contain a manual signature of an authorized agent of the Proposer. If the Proposer's authorized agent fails to sign the Proposal, its Proposal shall be considered non responsive and ineligible for award.
D. The accuracy of the Proposal is the sole responsibility of the Proposer. No changes in the Proposal shall be allowed after the submission deadline, except when the Proposer can show clear and convincing evidence that an unintentional factual mistake was made, including the nature of the mistake and the actual intention.

III. Oral Presentations

During the evaluation process a Selection Committee composed of Council members and staff, may, in its' sole discretion, request that one or more of the proposers make oral presentations. Such presentations will provide firms with an opportunity to answer any questions the Selection Committee may have on a proposal. Not all proposers may be asked to make oral presentations. The Selection Committee may not ask any of the Proposers to make such a presentation. The Selection Committee will present the list of finalists to the City Council and notify those selected to continue in the process on January 12, 2016.

IV. Interviews

The Englewood City Council expects to interview the finalists presented by the Selection Committee in a Study Session open to the public on January 18, 2016 6PM, MST.

V. Final Selection

It is anticipated that the final selection of a firm will made by February 1, 2016. See Appendix I for tentative schedule of project subsequent to February 1, 2016.

CONTACT WITH PERSONNEL OF THE CITY OF ENGLEWOOD OTHER THAN ALICIA STUTZ REGARDING THIS REQUEST FOR PROPOSAL MAY BE GROUNDS FOR ELIMINATION FROM THE SELECTION PROCESS.

Alicia Stutz
Procurement Administrator
City of Englewood, Colorado
Phone:
Fax:
Email:

Appendix I

SCOPE OF SERVICES and TENTATIVE SCHEDULE

The consultant shall perform executive search, recruitment and assessment services at the direction of and subject to City approval. A tentative timeline and general scope of work follows, but is only a guideline:

- **February 2 – 15, 2016** Finalize contract with Consultant, to include designation of Project Manager for Consultant. City of Englewood Project Manager will be the Director of Administrative Services, Shelley Becker. Outline project details.
    a. This step may include Consultant travel to the City on **February 8, 2016** to gain input from City Council in order to develop detailed candidate profile and the criteria that will be used to evaluate candidates.
- **February 16 – 29, 2016** The Consultant, with the assistance of City HR staff will finalize the candidate profile and project details and design an appropriate advertising campaign, including but not limited to:
    a. Developing and mailing brochures to appropriate audiences
    b. Advertising in professional journals, publications and websites
    c. Contacting professional associations
    d. Identifying and marketing the position to potential candidates in the field
    e. Posting on City and Consultant websites
    f. All applications will be submitted to the City through its website.
- **March 1 – 31, 2016** Position is posted. Consultant will receive and screen applications and resumes for minimum requirements established by City Council. Applications that meet minimum will be further screened to include: initial background/reference checks, personal &/or telephone interviews, etc.
- **April 4, 2016** Consultant recommends short list of candidates for the Council's consideration. With assistance from the City, the Consultant will design the most beneficial interviewing process, which may include:
    a. Developing interview questions for panels
    b. Training panelists
    c. Coordinating various aspects of the interview process
- **Week of April 18th** Conduct interview/assessment process approved by City Council
- **Week of April 25th** Consultant will conduct background and reference checks for top candidates, as required. Final follow up interviews &/or meetings with City Council will occur. If requested Consultant will assist with final offer.
- **May 1st** Offer made to successful candidate.

***Timeline is subject to change at the request of City Council.**

SIGNATURE PAGE
RFP-15-018
EXECUTIVE RECRUITMENT FOR CITY ATTORNEY

PROPOSAL FOR THE CITY OF ENGLEWOOD, COLORADO

Proposal Due Date: Thursday, January 7, 2016 2:00 P.M. MST
Submission Date: _____

Each respondent must sign the proposal with their usual signature and shall give their full business address. Proposals by corporations shall be signed with the name of the corporation followed by the signature and designation of the President, Secretary, or other person authorized to bind it in the matter and shall have the corporate seal affixed thereto. By signing below, Vendor further represents that this proposal is valid for at least 120 calendar days from the date of submission.

Company:	**Signature:**
Address:	**Name:**
Phone:	**Title:**
Fax:	**Date:**
Email:	**F.E.I.N./S.S.N.:**

(SAMPLE) CITY OF ENGLEWOOD
PROFESSIONAL SERVICES AGREEMENT
Contract Number _____

This Professional Services Agreement (the "Agreement") is made as of this _____ day of _____, 20____, (the "Effective Date") by and between _____, a _____ corporation ("Consultant"), and The City of Englewood, Colorado, a municipal corporation organized under the laws of the State of Colorado ("City").

City desires that Consultant, from time to time, provide certain consulting services, systems integration services, data conversion services, training services, and/or related services as described herein, and Consultant desires to perform such services on behalf of City on the terms and conditions set forth herein.

In consideration of the foregoing and the terms hereinafter set forth and other good and valuable consideration, the receipt and sufficiency of which are hereby acknowledged, the parties hereto, intending to be legally bound, agree as follows:

1. Definitions. The terms set forth below shall be defined as follows:

(a) "Intellectual Property Rights" shall mean any and all (by whatever name or term known or designated) tangible and intangible and now known or hereafter existing (1) rights associate with works of authorship throughout the universe, including but not limited to copyrights, moral rights, and mask-works, (2) trademark and trade name rights and similar rights, (3) trade secret rights, (4) patents, designs, algorithms and other industrial property rights, (5) all other intellectual and industrial property rights (of every kind and nature throughout the universe and however designated) (including logos, "rental" rights and rights to remuneration), whether arising by operation of law, contract, license, or otherwise, and (6) all registrations, initial applications, renewals, extensions, continuations, divisions or reissues hereof now or hereafter in force (including any rights in any of the foregoing).

(b) "Work Product" shall mean all patents, patent applications, inventions, designs, mask works, processes, methodologies, copyrights and copyrightable works, trade secrets including confidential information, data, designs, manuals, training materials and documentation, formulas, knowledge of manufacturing processes, methods, prices, financial and accounting data, products and product specifications and all other Intellectual Property Rights created, developed or prepared, documented and/or delivered by Consultant, pursuant to the provision of the Services.

2. Statements of Work. During the term hereof and subject to the terms and conditions contained herein, Consultant agrees to provide, on an as requested basis, the consulting services, systems integration services, data conversion services, training services, and related services (the "Services") as further described in Schedule A (the "Statement of Work") for City, and in such additional Statements of Work as may be executed by each of the parties hereto from time to time pursuant to this Agreement. Each Statement of Work shall specify the scope of work, specifications, basis of compensation and payment schedule, estimated length of time required to complete each Statement of Work, including the estimated start/finish dates, and other relevant information and shall incorporate all terms and conditions contained in this Agreement

3. Performance of Services.

(a) Performance. Consultant shall perform the Services necessary to complete all projects outlined in a Statement of Work in a timely and professional manner consistent with the specifications, if any, set forth in the Statement of Work, and in accordance with industry standards. Consultant agrees to exercise the highest degree of professionalism, and to utilize its expertise and creative talents in completing the projects outlined in a Statement of Work.

(b) Delays. Consultant agrees to notify City promptly of any factor, occurrence, or event coming to its attention that may affect Consultant's ability to meet the requirements of the Agreement, or that is likely to occasion any material delay in completion of the projects contemplated by this Agreement or any Statement of Work. Such notice shall be given in the event of any loss or reassignment of key employees, threat of strike, or major equipment failure. Time is expressly made of the essence with respect to each and every term and provision of this Agreement.

(c) Discrepancies. If anything necessary for the clear understanding of the Services has been omitted from the Agreement specifications or it appears that various instructions are in conflict, Consultant shall secure written instructions from City's project director before proceeding with the performance of the Services affected by such omissions or discrepancies.

4. Invoices and Payment. Unless otherwise provided in a Statement of Work, City shall pay the amounts agreed to in a Statement of Work within thirty (30) days following the acceptance by City of the work called for in a Statement of Work by City. Acceptance procedures shall be outlined in the Statement of Work. If City disputes all or any portion of an invoice for charges, then City shall pay the undisputed portion of the invoice by the due date and shall provide the following notification with respect to the disputed portion of the invoice. City shall notify Consultant as soon as possible of the specific amount disputed and shall provide reasonable detail as to the basis for the dispute. The parties shall then attempt to resolve the disputed portion of such invoice as soon as possible. Upon resolution of the disputed portion, City shall pay to Consultant the resolved amount.

5. Taxes. City is not subject to taxation. No federal or other taxes (excise, luxury, transportation, sales, etc.) shall be included in quoted prices. City shall not be obligated to pay or reimburse Consultant for any taxes attributable to the sale of any Services which are imposed on or measured by net or gross income, capital, net worth, franchise, privilege, any other taxes, or assessments, nor any of the foregoing imposed on or payable by Consultant. Upon written notification by City and subsequent verification by Consultant, Consultant shall reimburse or credit, as applicable, City in a timely manner, for any and all taxes erroneously paid by City. City shall provide Consultant with, and Consultant shall accept in good faith, resale, direct pay, or other exemption certificates, as applicable.

6. Out of Pocket Expenses. Consultant shall be reimbursed only for expenses which are expressly provided for in a Statement of Work or which have been approved in advance in writing by City, provided Consultant has furnished such documentation for authorized expenses as City may reasonably request.

7. Audits. Consultant shall provide such employees and independent auditors and inspectors as City may designate with reasonable access to all sites from which Services are performed for the purposes of performing audits or inspections of Consultant's operations and compliance with this Agreement. Consultant shall provide such auditors and inspectors any reasonable assistance that they may require. Such audits shall be conducted in such a way so that the Services or services to any other customer of Consultant are not impacted adversely.

8. Term and Termination. The term of this Agreement shall commence on the Effective Date and shall continue unless this Agreement is terminated as provided in this Section 8.

(a) Convenience. City may, without cause and without penalty, terminate the provision of Services under any or all Statements of Work upon thirty (30) days prior written notice. Upon such termination, City shall, upon receipt of an invoice from Consultant, pay Consultant for Services actually rendered prior to the effective date of such termination. Charges will be based on time expended for all incomplete tasks as listed in the applicable Statement of Work, and all completed tasks will be charged as indicated in the applicable Statement of Work.

(b) No Outstanding Statements of Work. Either party may terminate this Agreement by providing the other party with at least thirty (30) days prior written notice of termination if there are no outstanding Statements of Work.

(c) Material Breach. If either party materially defaults in the performance of any term of a Statement of Work or this Agreement with respect to a specific Statement of Work (other than by nonpayment) and does not substantially cure such default within thirty (30) days after receiving written notice of such default, then the non-defaulting party may terminate this Agreement or any or all outstanding Statements of Work by providing ten (10) days prior written notice of termination to the defaulting party.

(d) Bankruptcy or Insolvency. Either party may terminate this Agreement effective upon written notice stating its intention to terminate in the event the other party: (1) makes a general assignment of all or substantially all of its assets for the benefit of its creditors; (2) applies for, consents to, or acquiesces in the appointment of a receiver, trustee, custodian, or liquidator for its business or all or substantially all of its assets; (3) files, or consents to or acquiesces in, a petition seeking relief or reorganization under any bankruptcy or insolvency laws; or (4) files a petition seeking relief or reorganization under any bankruptcy or insolvency laws is filed against that other party and is not dismissed within sixty (60) days after it was filed.

(e) TABOR. The parties understand and acknowledge that each party is subject to Article X, § 20 of the Colorado Constitution ("TABOR"). The parties do not intend to violate the terms and requirements of TABOR by the execution of this Agreement. It is understood and agreed that this Agreement does not create a multi-fiscal year direct or indirect debt or obligation within the meaning of TABOR and, notwithstanding anything in this Agreement to the contrary, all payment obligations of City are expressly dependent and conditioned upon the continuing availability of funds beyond the term of City's current fiscal period ending upon the next succeeding December 31. Financial obligations of City payable after the current fiscal year are contingent upon funds for that purpose being appropriated, budgeted, and otherwise made available in accordance with the rules, regulations, and resolutions of City and applicable law. Upon the failure to appropriate such funds, this Agreement shall be deemed terminated.

(f) Return of Property. Upon termination of this Agreement, both parties agree to return to the other all property (including any Confidential Information, as defined in Section 11) of the other party that it may have in its possession or control.

9. City Obligations. City will provide timely access to City personnel, systems and information required for Consultant to perform its obligations hereunder. City shall provide to Consultant's employees performing its obligations hereunder at City's premises, without charge, a reasonable work environment in compliance with all applicable laws and regulations, including office space, furniture, telephone service, and reproduction, computer, facsimile, secretarial and other necessary equipment, supplies, and services. With respect to all third party hardware or software operated by or on behalf of City, City shall, at no expense to Consultant, obtain all consents, licenses and sublicenses necessary for Consultant to perform under the Statements of Work and shall pay any fees or other costs associated with obtaining such consents, licenses and sublicenses.

10. Staff. Consultant is an independent consultant and neither Consultant nor Consultant's staff is, or shall be deemed to be employed by City. City is hereby contracting with Consultant for the Services described in a Statement of Work and Consultant reserves the right to determine the method, manner and means by which the Services will be performed. The Services shall be performed by Consultant or Consultant's staff, and City shall not be required to hire, supervise or pay any assistants to help Consultant perform the Services under this Agreement. Except to the extent that Consultant's work must be performed on or with City's computers or City's existing software, all materials used in providing the Services shall be provided by Consultant.

11. Confidential Information.

(a) Obligations. Each party hereto may receive from the other party information which relates to the other party's business, research, development, trade secrets or business affairs ("Confidential Information"). Subject to the provisions and exceptions set forth in the Colorado Open Records Act, CRS Section 24-72-101 et. seq., each party shall protect all Confidential Information of the other party with the same degree of care as it uses to avoid unauthorized use, disclosure, publication or dissemination of its own confidential information of a similar nature, but in no event less than a reasonable degree of care. Without limiting the generality of the foregoing, each

party hereto agrees not to disclose or permit any other person or entity access to the other party's Confidential Information except such disclosure or access shall be permitted to an employee, agent, representative or independent consultant of such party requiring access to the same in order to perform his or her employment or services. Each party shall insure that their employees, agents, representatives, and independent consultants are advised of the confidential nature of the Confidential Information and are precluded from taking any action prohibited under this Section 11. Further, each party agrees not to alter or remove any identification, copyright or other proprietary rights notice which indicates the ownership of any part of such Confidential Information by the other party. A party hereto shall undertake to immediately notify the other party in writing of all circumstances surrounding any possession, use or knowledge of Confidential Information at any location or by any person or entity other than those authorized by this Agreement. Notwithstanding the foregoing, nothing in this Agreement shall restrict either party with respect to information or data identical or similar to that contained in the Confidential Information of the other party but which (1) that party rightfully possessed before it received such information from the other as evidenced by written documentation; (2) subsequently becomes publicly available through no fault of that party; (3) is subsequently furnished rightfully to that party by a third party without restrictions on use or disclosure; or (4) is required to be disclosed by law, provided that the disclosing party will exercise reasonable efforts to notify the other party prior to disclosure.

(b) Know-How. For the avoidance of doubt neither City nor Consultant shall be prevented from making use of know-how and principles learned or experience gained of a non-proprietary and non-confidential nature.

(c) Remedies. Each of the parties hereto agree that if any of them, their officers, employees or anyone obtaining access to the Confidential Information of the other party by, through or under them, breaches any provision of this Section 11, the non-breaching party shall be entitled to an accounting and repayment of all profits, compensation, commissions, remunerations and benefits which the breaching party, its officers or employees directly or indirectly realize or may realize as a result of or growing out of, or in connection with any such breach. In addition to, and not in limitation of the foregoing, in the event of any breach of this Section 11, the parties agree that the non-breaching party will suffer irreparable harm and that the total amount of monetary damages for any such injury to the non-breaching party arising from a violation of this Section 11 would be impossible to calculate and would therefore be an inadequate remedy at law. Accordingly, the parties agree that the non-breaching party shall be entitled to temporary and permanent injunctive relief against the breaching party, its officers or employees and such other rights and remedies to which the non-breaching party may be entitled to at law, in equity or under this Agreement for any violation of this Section 11. The provisions of this Section 11 shall survive the expiration or termination of this Agreement for any reason.

12. Project Managers. Each party shall designate one of its employees to be its Project Manager under each Statement of Work, who shall act for that party on all matters under the Statement of Work. Each party shall notify the other in writing of any replacement of a Project Manager. The Project Managers for each Statement of Work shall meet as often as either one requests to review the status of the Statement of Work.

13. Warranties.

(a) Authority. Consultant represents and warrants that: (1) Consultant has the full corporate right, power and authority to enter into this Agreement and to perform the acts required of it hereunder; (2) the execution of this Agreement by Consultant, and the performance by Consultant of its obligations and duties hereunder, do not and will not violate any agreement to which Consultant is a party or by which it is otherwise bound under any applicable law, rule or regulation; (3) when executed and delivered by Consultant, this Agreement will constitute the legal, valid and binding obligation of such party, enforceable against such party in accordance with its terms; and (4) Consultant acknowledges that City makes no representations, warranties or agreements related to the subject matter hereof that are not expressly provided for in this Agreement

(b) Service Warranty. Consultant warrants that its employees and consultants shall have sufficient skill, knowledge, and training to perform Services and that the Services shall be performed in a professional and workmanlike manner.

(c) Personnel. Unless a specific number of employees is set forth in the Statement of Work, Consultant warrants it will provide sufficient employees to complete the Services ordered within the applicable time frames established pursuant to this Agreement or as set forth in the Statement of Work.. During the course of performance of Services, City may, for any or no reason, request replacement of an employee or a proposed employee. In such event, Consultant shall, within five (5) working days of receipt of such request from City, provide a substitute employee of sufficient skill, knowledge, and training to perform the applicable Services. Consultant shall require employees providing Services at a City location to comply with applicable City security and safety regulations and policies.

(d) Compensation and Benefits. Consultant shall provide for and pay the compensation of employees and shall pay all taxes, contributions, and benefits (such as, but not limited to, workers' compensation benefits) which an employer is required to pay relating to the employment of employees. City shall not be liable to Consultant or to any employee for Consultant's failure to perform its compensation, benefit, or tax obligations. Consultant shall indemnify, defend and hold City harmless from and against all such taxes, contributions and benefits and will comply with all associated governmental regulations, including the filing of all necessary reports and returns.

14. Indemnification.

(a) Consultant Indemnification. Consultant shall indemnify, defend and hold harmless City, its directors, officers, employees, and agents and the heirs, executors, successors, and permitted assigns of any of the foregoing (the "City Indemnitees") from and against all losses, claims, obligations, demands, assessments, fines and penalties (whether civil or criminal), liabilities, expenses and costs (including reasonable fees and disbursements of legal counsel and accountants), bodily and other personal injuries, damage to tangible property, and other damages, of any kind or nature, suffered or incurred by a City Indemnitee directly or indirectly arising from or related to: (1) any negligent or intentional act or omission by Consultant or its representatives in the performance of Consultant's obligations under this Agreement, or (2) any material breach in a representation, warranty, covenant or obligation of Consultant contained in this Agreement.

(b) Infringement. Consultant will indemnify, defend, and hold City harmless from all Indemnifiable Losses arising from any third party claims that any Work Product or methodology supplied by Consultant infringes or misappropriates any Intellectual Property rights of any third party; provided, however, that the foregoing indemnification obligation shall not apply to any alleged infringement or misappropriation based on: (1) use of the Work Product in combination with products or services not provided by Consultant to the extent that such infringement or misappropriation would have been avoided if such other products or services had not been used; (2) any modification or enhancement to the Work Product made by City or anyone other than Consultant or its sub-consultants; or (3) use of the Work Product other than as permitted under this Agreement.

(c) Indemnification Procedures. Not-with-standing anything else contained in this Agreement, no obligation to indemnify which is set forth in this Section 14 shall apply unless the party claiming indemnification notifies the other party as soon as practicable to avoid any prejudice in the claim, suit or proceeding of any matters in respect of which the indemnity may apply and of which the notifying party has knowledge and gives the other party the opportunity to control the response thereto and the defense thereof; provided, however, that the party claiming indemnification shall have the right to participate in any legal proceedings to contest and defend a claim for indemnification involving a third party and to be represented by its own attorneys, all at such party's cost and expense; provided further, however, that no settlement or compromise of an asserted third-party claim other than the payment/money may be made without the prior written consent of the party claiming indemnification.

(d) Immunity. City, its officers, and its employees, are relying on, and do not waive or intend to waive by any provision of this Agreement, the monetary limitations or any other rights, immunities, and protections provided by the Colorado Governmental Immunity Act, C.R.S. 24-10-101 et seq., as from time to time amended, or otherwise available to City, its officers, or its employees.

15. Insurance.

(a) Requirements. Consultant agrees to keep in full force and effect and maintain at its sole cost and expense the following policies of insurance during the term of this Agreement:

(1) The Consultant shall comply with the Workers' Compensation Act of Colorado and shall provide compensation insurance to protect the City from and against any and all Workers' Compensation claims arising from performance of the work under this contract. Workers' Compensation insurance must cover obligations imposed by applicable laws for any employee engaged in the performance of work under this contract, as well as the Employers' Liability within the minimum statutory limits.

(2) Commercial General Liability Insurance and auto liability insurance (including contractual liability insurance) providing coverage for bodily injury and property damage with a combined single limit of not less than three million dollars ($3,000,000) per occurrence.

(3) Professional Liability/Errors and Omissions Insurance covering acts, errors and omissions arising out of Consultant's operations or Services in an amount not less than one million dollars ($1,000,000) per occurrence.

(4) Employee Dishonesty and Computer Fraud Insurance covering losses arising out of or in connection with any fraudulent or dishonest acts committed by Consultant personnel, acting alone or with others, in an amount not less than one million dollars ($1,000,000) per occurrence.

(b) Approved Companies. All such insurance shall be procured with such insurance companies of good standing, permitted to do business in the country, state or territory where the Services are being performed.

(c) Certificates. Consultant shall provide City with certificates of insurance evidencing compliance with this Section 15 (including evidence of renewal of insurance) signed by authorized representatives of the respective carriers for each year that this Agreement is in effect. Certificates of insurance will list the City of Englewood as an additional insured. Each certificate of insurance shall provide that the issuing company shall not cancel, reduce, or otherwise materially change the insurance afforded under the above policies unless thirty (30) days' notice of such cancellation, reduction or material change has been provided to City.

16. Rights in Work Product.

(a) Generally. Except as specifically agreed to the contrary in any Statement of Work, all Intellectual Property Rights in and to the Work Product produced or provided by Consultant under any Statement of Work shall remain the property of Consultant. With respect to the Work Product, Consultant unconditionally and irrevocably grants to City during the term of such Intellectual Property Rights, a non-exclusive, irrevocable, perpetual, worldwide, fully paid and royalty-free license, to reproduce, create derivative works of, distribute, publicly perform and publicly display by all means now known or later developed, such Intellectual property Rights.

(b) Know-How. Notwithstanding anything to the contrary herein, each party and its respective personnel and consultants shall be free to use and employ its and their general skills, know-how, and expertise, and to use, disclose, and employ any generalized ideas, concepts, know-how, methods, techniques, or skills gained or learned during the course of any assignment, so long as it or they acquire and apply such information without disclosure of any Confidential Information of the other party.

17. Relationship of Parties. Consultant is acting only as an independent consultant and does not undertake, by this Agreement, any Statement of Work or otherwise, to perform any obligation of City, whether regulatory or contractual, or to assume any responsibility for City's business or operations. Neither party shall act or represent itself, directly or by implication, as an agent of the other, except as expressly authorized in a Statement of Work.

18. Complete Agreement. This Agreement contains the entire agreement between the parties hereto with respect to the matters covered herein.

19. Applicable Law. Consultant shall comply with all applicable laws in performing Services but shall be held harmless for violation of any governmental procurement regulation to which it may be subject but to which reference is not made in the applicable Statement of Work. This Agreement shall be construed in accordance with the laws of the State of Colorado. Any action or

proceeding brought to interpret or enforce the provisions of this Agreement shall be brought before the state or federal court situated in Arapahoe County, Colorado and each party hereto consents to jurisdiction and venue before such courts.

20. Scope of Agreement. If the scope of any provisions of this Agreement is too broad in any respect whatsoever to permit enforcement to its fullest extent, then such provision shall be enforced to the maximum extent permitted by law, and the parties hereto consent to and agree that such scope may be judicially modified accordingly and that the whole of such provision of this Agreement shall not thereby fail, but that the scope of such provision shall be curtailed only to the extent necessary to conform to law.

21. Additional Work. After receipt of a Statement of Work, City, with Consultant's consent, may request Consultant to undertake additional work with respect to such Statement of Work. In such event, City and Consultant shall execute an addendum to the Statement of Work specifying such additional work and the compensation to be paid to Consultant for such additional work.

22. Sub-consultants. Consultant may not subcontract any of the Services to be provided hereunder without the prior written consent of City. In the event of any permitted subcontracting, the agreement with such third party shall provide that, with respect to the subcontracted work, such sub-consultant shall be subject to all of the obligations of Consultant specified in this Agreement.

23. Notices. Any notice provided pursuant to this Agreement shall be in writing to the parties at the addresses set forth below and shall be deemed given (1) if by hand delivery, upon receipt thereof, (2) three (3) days after deposit in the United States mails, postage prepaid, certified mail, return receipt requested or (3) one (1) day after deposit with a nationally-recognized overnight courier, specifying overnight priority delivery. Either party may change its address for purposes of this Agreement at any time by giving written notice of such change to the other party hereto.

24. Assignment. This Agreement may not be assigned by Consultant without the prior written consent of City. Except for the prohibition of an assignment contained in the preceding sentence, this Agreement shall be binding upon and inure to the benefit of the heirs, successors and assigns of the parties hereto.

25. Third Party Beneficiaries. This Agreement is entered into solely for the benefit of the parties hereto and shall not confer any rights upon any person or entity not a party to this Agreement.

26. Headings. The section headings in this Agreement are solely for convenience and shall not be considered in its interpretation. The recitals set forth on the first page of this Agreement are incorporated into the body of this Agreement. The exhibits referred to throughout this Agreement and any Statement of Work prepared in conformance with this Agreement are incorporated into this Agreement.

27. Waiver. The failure of either party at any time to require performance by the other party of any provision of this Agreement shall not effect in any way the full right to require such performance at any subsequent time; nor shall the waiver by either party of a breach of any provision of this Agreement be taken or held to be a waiver of the provision itself.

28. Force Majeure. If performance by Consultant of any service or obligation under this Agreement is prevented, restricted, delayed or interfered with by reason of labor disputes, strikes, acts of God, floods, lightning, severe weather, shortages of materials, rationing, utility or communications failures, earthquakes, war, revolution, civil commotion, acts of public enemies, blockade, embargo or any law, order, proclamation, regulation, ordinance, demand or requirement having legal effect of any governmental or judicial authority or representative of any such government, or any other act whether similar or dissimilar to those referred to in this clause, which are beyond the reasonable control of Consultant, then Consultant shall be excused from such performance to the extent of such prevention, restriction, delay or interference. If the period of such delay exceeds thirty (30) days, City may, without liability, terminate the affected Statement of Work(s) upon written notice to Consultant.

29. Time of Performance. Time is expressly made of the essence with respect to each and every term and provision of this Agreement.

30. Permits. Consultant shall at its own expense secure any and all licenses, permits or certificates that may be required by any federal, state or local statute, ordinance or regulation for the performance of the Services under the Agreement. Consultant shall also comply with the provisions of all Applicable Laws in performing the Services under the Agreement. At its own expense and at no cost to City, Consultant shall make any change, alteration or modification that may be necessary to comply with any Applicable Laws that Consultant failed to comply with at the time of performance of the Services.

31. Media Releases. Except for any announcement intended solely for internal distribution by Consultant or any disclosure required by legal, accounting, or regulatory requirements beyond the reasonable control of Consultant, all media releases, public announcements, or public disclosures (including, but not limited to, promotional or marketing material) by Consultant or its employees or agents relating to this Agreement or its subject matter, or including the name, trade mark, or symbol of City, shall be coordinated with and approved in writing by City prior to the release thereof. Consultant shall not represent directly or indirectly that any Services provided by Consultant to City has been approved or endorsed by City or include the name, trade mark, or symbol of City on a list of Consultant's customers without City's express written consent.

32. Nonexclusive Market and Purchase Rights. It is expressly understood and agreed that this Agreement does not grant to Consultant an exclusive right to provide to City any or all of the Services and shall not prevent City from acquiring from other suppliers services similar to the Services. Consultant agrees that acquisitions by City pursuant to this Agreement shall neither restrict the right of City to cease acquiring nor require City to continue any level of such acquisitions. Estimates or forecasts furnished by City to Consultant prior to or during the term of this Agreement shall not constitute commitments.

33. Survival. The provisions of Sections 5, 8(g), 10, 11, 13, 14, 16, 17, 19, 23, 25 and 31 shall survive any expiration or termination for any reason of this Agreement.

34. Verification of Compliance with C.R.S. 8-17.5-101 ET.SEQ. Regarding Hiring of Illegal Aliens:

(a) Employees, Consultants and Sub-consultants: Consultant shall not knowingly employ or contract with an illegal alien to perform work under this Contract. Consultant shall not contract with a sub-consultant that fails to certify to the Consultant that the sub-consultant will not knowingly employ or contract with an illegal alien to perform work under this Contract. [CRS 8-17.5-102(2)(a)(I) & (II).]

(b) Verification: Consultant will participate in either the E-Verify program or the Department program, as defined in C.R.S. 8-17.5-101 (3.3) and 8-17.5-101 (3.7), respectively, in order to confirm the employment eligibility of all employees who are newly hired for employment to perform work under this public contract for services. Consultant is prohibited from using the E-Verify program or the Department program procedures to undertake pre-employment screening of job applicants while this contract is being performed.

(c) Duty to Terminate a Subcontract: If Consultant obtains actual knowledge that a sub-consultant performing work under this Contract knowingly employs or contracts with an illegal alien, the Consultant shall;

(1) notify the sub-consultant and the City within three days that the Consultant has actual knowledge that the sub-consultant is employing or contracting with an illegal alien; and

(2) terminate the subcontract with the sub-consultant if, within three days of receiving notice required pursuant to this paragraph the sub-consultant does not stop employing or contracting with the illegal alien; except that the Consultant shall not terminate the contract with the sub-consultant if during such three days the sub-consultant provides information to establish that the sub-consultant has not knowingly employed or contracted with an illegal alien.

(d) Duty to Comply with State Investigation: Consultant shall comply with any reasonable request of the Colorado Department of Labor and Employment made in the course of an investigation by that the Department is undertaking pursuant to C.R.S. 8-17.5-102 (5)

(e) Damages for Breach of Contract: The City may terminate this contract for a breach of contract, in whole or in part, due to Consultant's breach of any section of this paragraph or provisions required pursuant to CRS 8-17.5-102. Consultant shall be liable for actual and consequential damages to the City in addition to

any other legal or equitable remedy the City may be entitled to for a breach of this Contract under this Paragraph 34.

IN WITNESS WHEREOF, the parties to this Agreement have caused it to be executed by their authorized officers as of the day and year first above written. This Agreement may be executed in counterparts, each of which shall be deemed an original, but all of which together shall constitute one and the same instrument.

CITY OF ENGLEWOOD, COLORADO

By: _____ **Date:** _____
(Department Director)

By: _____ **Date:** _____
(City manager)

By: _____ **Date:** _____
(Mayor)

ATTEST: _____
City Clerk

_____
(Consultant Name)

_____
Address

_____
City, State, Zip Code

By: _____
(Signature)

_____
(Print Name)

Title: _____

Date: _____

STATE OF _____)
) ss.
COUNTY OF _____)

On this _____ day of _____, 20___, before me personally appeared _____, known to me to be the _____ of _____, the corporation that executed the within and foregoing instrument, and acknowledged the said instrument to be the free and voluntary act and deed of said corporation for the uses and purposes therein mentioned, and on oath stated that he was authorized to execute said instrument.

IN WITNESS WHEREOF, I have hereunto set my hand and affixed my official seal the day and year first above written.

My commission expires: _____

_____
NOTARY

SCHEDULE A

OUTLINE OF STATEMENT OF WORK

1. *GENERAL*

   [Identification of parties and date of execution]

   [Reference to Professional Services Agreement by date]

2. *NAMES OF PROJECT COORDINATORS*

3. *SUMMARY OF PURPOSE FOR STATEMENT OF WORK*

   [General description of work or services]

4. *EQUIPMENT AND PROGRAMMING TO BE PROVIDED BY CITY (IF ANY)*

5. OTHER CONSULTANT RESOURCES

   [If desired, provide for the Consultant's commitment of its own staff, facilities, and other resources by nature or item]

6. DESCRIPTION OF WORK PRODUCT AND DELIVERABLES

   [Include functional and technical specifications of Work Product and Documentation, and refer to any specific enhancements that may be sought.]

   [Describe prototype or components to be delivered.]

   [Include as Deliverables copies of the reports of all project reviews, inspections, and tests conducted during the course of performance.]

7. SPECIAL TERMS, IF ANY

8. MODE OF PAYMENT

9. PAYMENT SCHEDULE

City will pay Consultant for the work in accordance with the following payment schedule. All payments to Consultant are contingent on Consultant's satisfying the Deliverables/Milestones set forth in the Payment Schedule. Payments shall be made upon City's written confirmation to Consultant that the Deliverables-Milestones have been satisfied.

[Insert payment schedule]

10. SCHEDULE AND PERFORMANCE MILESTONES

This schedule sets for the target dates and performance milestones for the preparation and delivery of the Deliverables by Consultant.

Performance Milestone	Responsible Party	Target Date

11. ACCEPTANCE AND TESTING PROCEDURES

12. LOCATION OF WORK FACILITIES

Substantially all of the work will be conducted by Consultant at its regular office located in _____.

City will provide the City office space and support as it agrees may be appropriate, at its _____ facility.

IN WITNESS WHEREOF, pursuant and in accordance with the Professional Services Agreement between the parties hereto dated _____, 20__, the parties have executed this Statement of Work as of this _____ day of _____, 20__.

CITY OF ENGLEWOOD, COLORADO

By: _____
(Signature)

_____
(Print Name)

Title: _____

Date: _____

_____
Company Name

By: _____
(Signature)

_____
(Print Name)

Title: _____

Date: _____

RESOLUTION NO. _____
SERIES OF 2015

A RESOLUTION ESTABLISHING THE SALARY FOR THE ACTING CITY ATTORNEY OF THE CITY OF ENGLEWOOD, COLORADO.

WHEREAS, the City Council for the City of Englewood, by Section 64 of the Englewood Home Rule Charter, has the responsibility of establishing the salary for the City Attorney; and

WHEREAS, on November 16, 2015 the Englewood City Council accepted the resignation of the City Attorney and appointed an Acting City Attorney; and

WHEREAS, the Acting City Attorney should be compensated during their tenure as Acting City Attorney; and

WHEREAS, the City Council has determined that the salary of Acting City Attorney shall be adjusted accordingly.

NOW, THEREFORE, BE IT RESOLVED BY THE CITY COUNCIL OF THE CITY OF ENGLEWOOD, COLORADO, THAT:

Section 1. The base pay for the Acting City Attorney shall be $_____ commencing November 16, 2015.

ADOPTED AND APPROVED this 7th day of December, 2015.

ATTEST:

_____
Joe Jefferson, Mayor

_____
Loucrishia A. Ellis, City Clerk

I, Loucrishia A. Ellis, City Clerk for the City of Englewood, Colorado, hereby certify the above is a true copy of Resolution No. _____, Series of 2015.

_____
Loucrishia A. Ellis, City Clerk